1 FOOTING DETAIL

SCALE: 1"=1'-0"

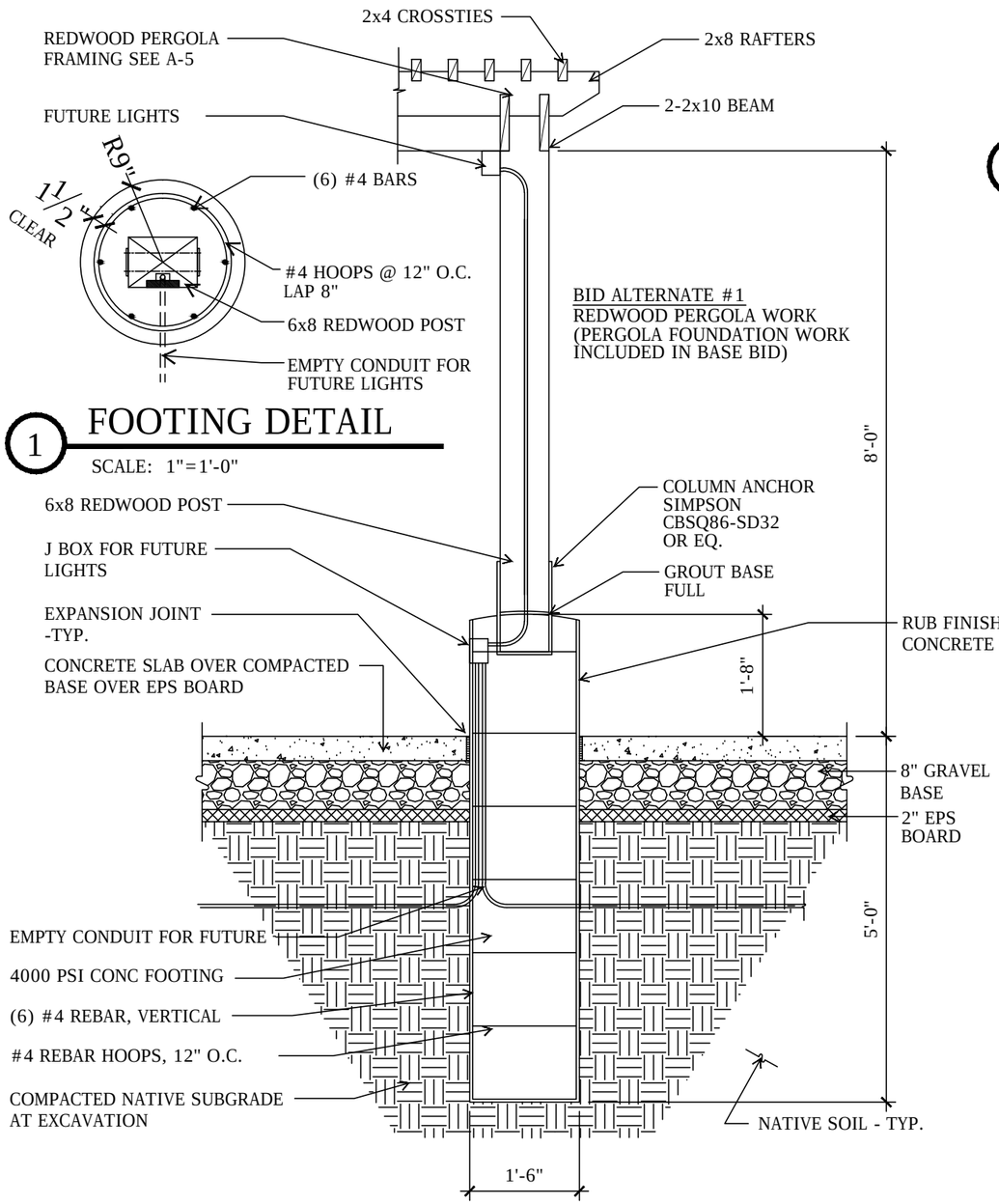

2 POST & FOOTING DETAIL

SCALE: 1/2"=1'-0"

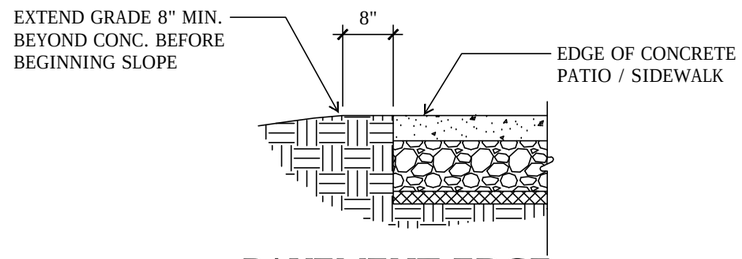

3 PAVEMENT EDGE

SCALE: 1/2"=1'-0"

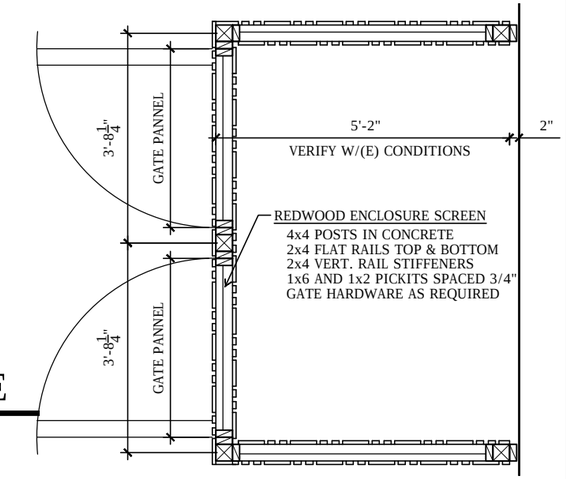

4 AC ENCLOSURE

PLAN SCALE: 3/8"=1'-0"
SCALE: 1/2"=1'-0"

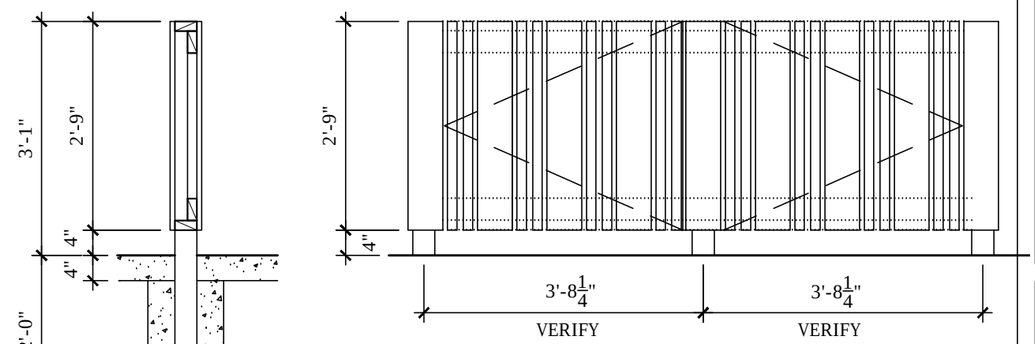

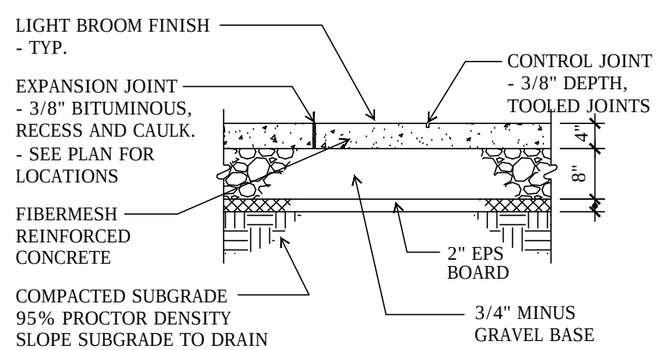

NOTE:
1. PROVIDE URETHANE CAULK OVER ALL RECESSED EXPANSION JOINTS.
- TYPICAL

5 CONCRETE PAVEMENT

SCALE: 1/2"=1'-0"

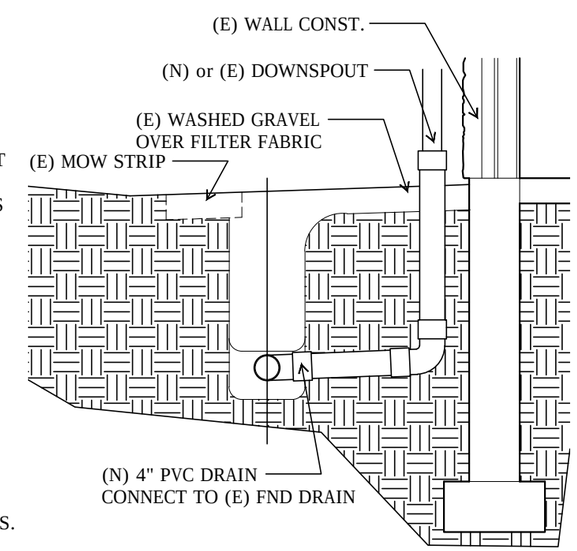

6 FOUNDATION DRAIN

SCALE: 1/2"=1'-0"

PATIO EXPANSION
EASTERN MONTANA VETERANS HOME
DEPT. OF PUBLIC HEALTH & HUMAN SERVICES
GLENDIVE, MONTANA

STATE OF MONTANA, DEPT. OF ADMINISTRATION
ARCHITECTURE & ENGINEERING DIVISION
1520 East 6th Avenue P.O. BOX 200103
HELENA, MT 59620-0103
P (406)444-3104 F (406)444-3399

DATE: 05-05-14
REVISED: 07-31-14

CHECKED BY: RKH
DRAWN BY: CLS

EASTERN MT VETERANS
DETAILS

A-4

SHEET 4 OF 6