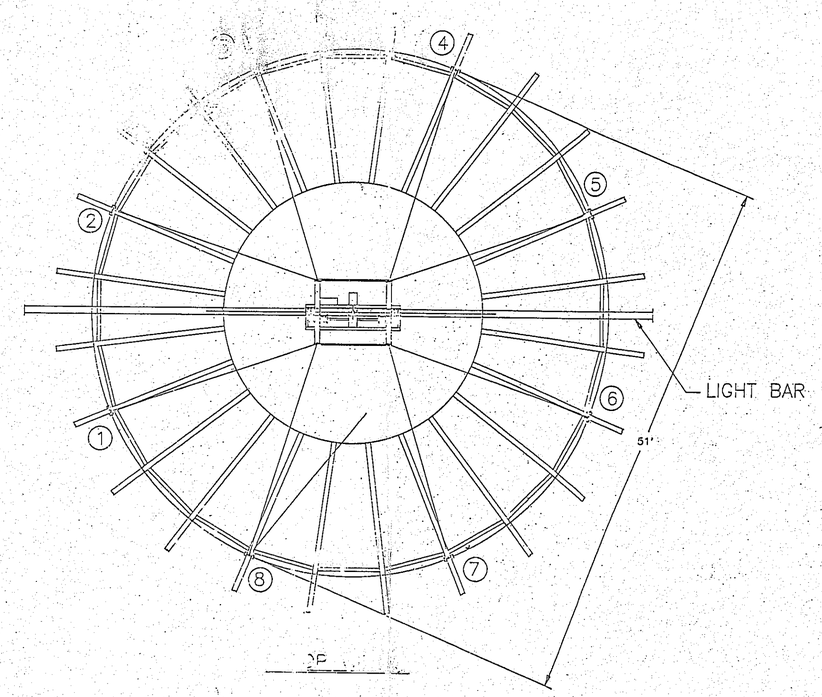

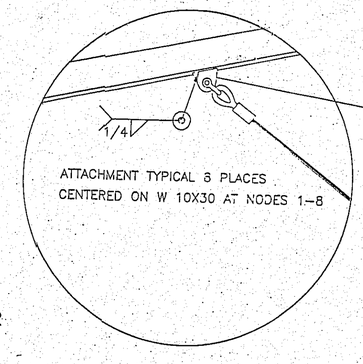

DETAIL A

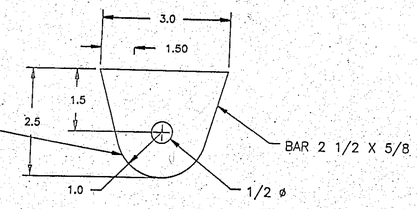

ATTACHMENT BRACKET
8 REQUIRED

REGISTERED PROFESSIONAL ENGINEER
JACK S. NIELSEN
No. C 045032
Exp. 12/31/98
CIVIL
STATE OF CALIFORNIA

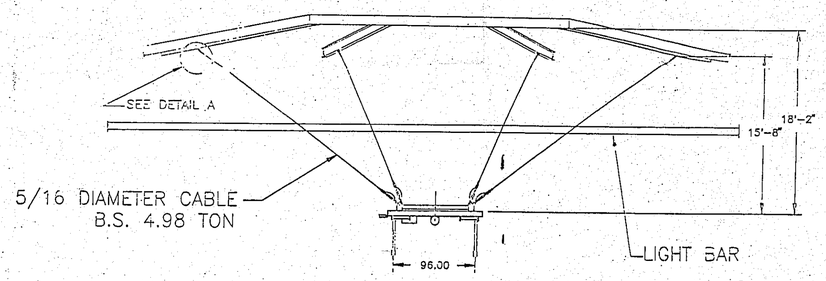

ELEVATION VIEW PERPENDICULAR TO LIGHT BAR

95-0054

NOTES:

1. SCOREBOARD WEIGHT = 4300
   HOIST AND MISC = 2700
2. THE ANGLE FROM A VERTICAL ABOVE HOIST TO THE CABLES IS 55 DEGREES FOR NODES 1,2,5 AND 6 AND 56 DEGREES FOR NODES 3,4,7,AND 8
3. HORIZONTAL FORCE COMPONENT AT EACH ATTACHMENT POINT IS 1300 LBS
   VERTICAL FORCE COMPONENT AT EACH ATTACHEMENT POINT IS 875 LBS.
4. ATTACHEMENT POINTS TO BE AT THE 25.5 FT RADIUS
5. SOME STRUCTURE OMITED FOR CLARITY
6. TOP CABLE ENDS TO BE FLEMISH EYE.
   THE BOTTOM MAY REQUIRE CROSBY CLAMPS FOR FIELD ADJUSTING OF C.G. AND COURT CENTERING OF SCOREBOARD
7. SYSTEM TO BE DESIGNED TO HIDE AS MUCH OF HOIST AND FRAME WITH SCOREBOARD AS CAN SAFELY BE ACCOMPLISHED

REV.	DATE	DESCRIPTION	MADE	APPR
1	15DEC94	Removed preliminary note	JAH	

DAKTRONICS, INC.
BROOKINGS, SOUTH DAKOTA 57006

CAL STATE SAN BERNARDINO

CONCEPT: SUSPENSION SYSTEM

DRAWING NUMBER: 1043-E07C-60744 SCALE: 1=100

DESIGNED: VERN V.	DRAWN: VERN V.
DATE: 25 JAN 94	DATE: 25 94
CHECKED:	APPROVED:
DATE:	DATE:

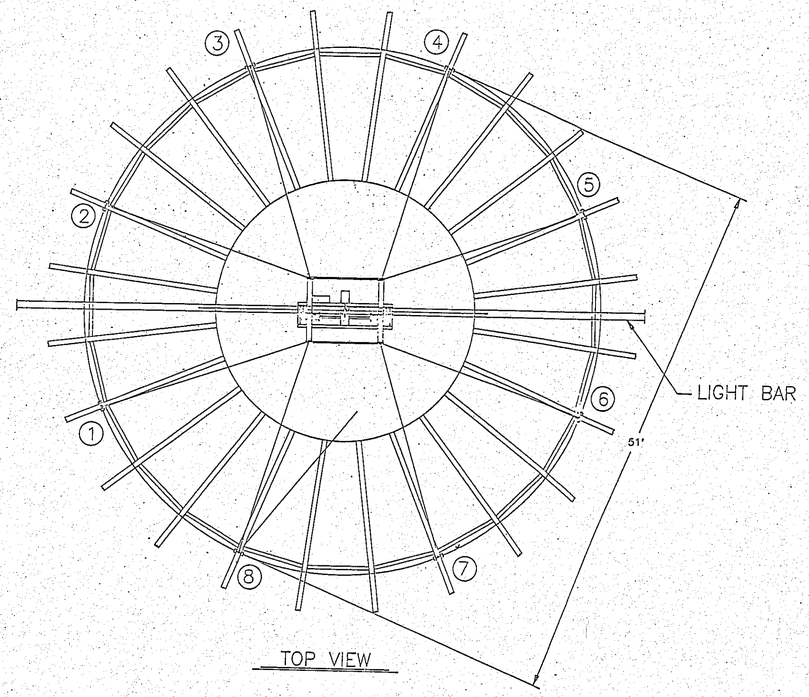

TOP VIEW

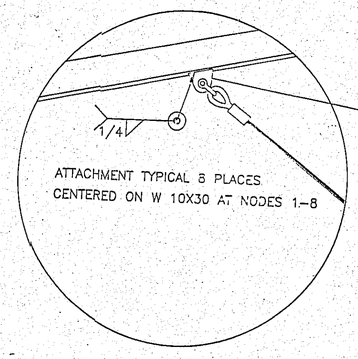

DETAIL A

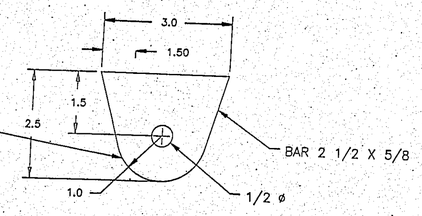

ATTACHMENT BRACKET
8 REQUIRED

REGISTERED PROFESSIONAL ENGINEER
JACK S. NIELSEN
No. C 046032
Exp. 12/31/98
CIVIL
STATE OF CALIFORNIA

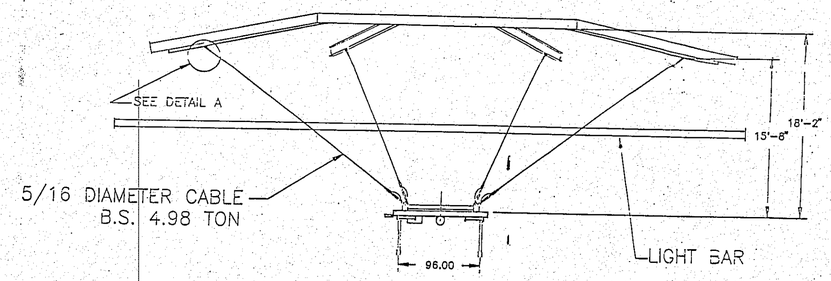

ELEVATION VIEW PERPENDICULAR TO LIGHT BAR

NOTES:

1. SCOREBOARD WEIGHT = 4300
   HOIST AND MISC = 2700
2. THE ANGLE FROM A VERTICAL ABOVE HOIST TO THE CABLES IS 55 DEGREES FOR NODES 1,2,5 AND 6 AND 56 DEGREES FOR NODES 3,4,7,AND 8
3. HORIZONTAL FORCE COMPONENT AT EACH ATTACHMENT POINT IS 1300 LBS
   VERTICAL FORCE COMPONENT AT EACH ATTACHEMENT POINT IS 875 LBS.
4. ATTACHEMENT POINTS TO BE AT THE 25.5 FT RADIUS
5. SOME STRUCTURE OMITED FOR CLARITY
6. TOP CABLE ENDS TO BE FLEMISH EYE.
   THE BOTTOM MAY REQUIRE CROSBY CLAMPS FOR FIELD ADJUSTING OF C.G. AND COURT CENTERING OF SCOREBOARD
7. SYSTEM TO BE DESIGNED TO HIDE AS MUCH OF HOIST AND FRAME WITH SCOREBOARD AS CAN SAFELY BE ACCOMPLISHED

REV.	DATE	DESCRIPTION	MADE
1	15DEC94	Removed Prelim Theory Note	JAH

DAKTRONICS, INC
BROOKINGS, SOUTH DAKOTA 57006

CAL STATE SAN BERNARDINO

CONCEPT: SUSPENSION SYSTEM

DRAWING NUMBER: 1043-E07C-60744	SCALE: 1=100
DESIGNED: VERN V.	DRAWN: VERN V
DATE: 25 JAN 94	DATE: 25 JAN 94
CHECKED:	APPROVED:
DATE:	DATE:

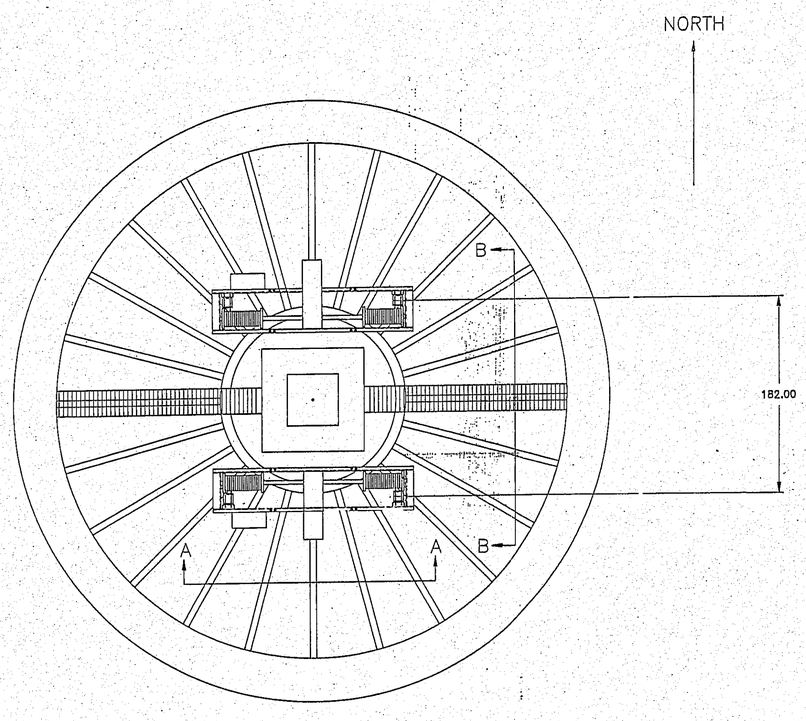

TOP VIEW

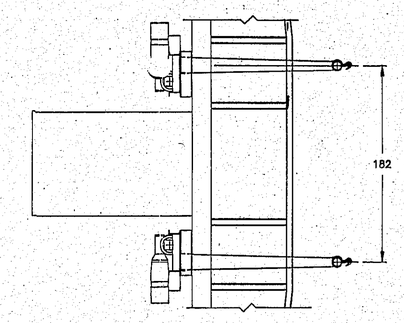

SECTION VIEW B–B

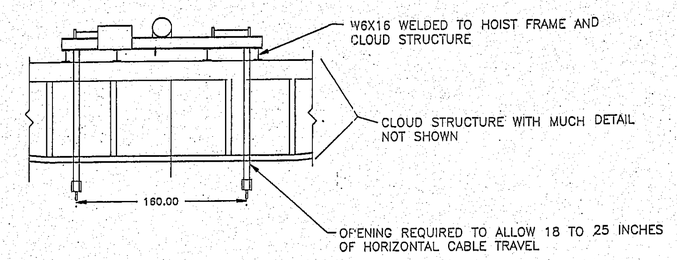

SECTION VIEW A–A

NOTES:

1. CONFIGURATION OF HOIST IS CLOSE BUT NOT EXACT EXACT CONFIGURATION CAN BE SUBMITTED AFTER RECEIVED FROM HOIST MANUFACTURE IF DEVIATION FROM THAT SHOWN IS SIGNIFICANT.
2. SIGNED APPROVAL OF SUSPENSION CONCEPT SHOWN ON THIS DRAWING IS REQUIRED FROM OWNER.
3. ALL DIMENSIONS IN INCHES. DIMENSIONS ARE CLOSE BUT MAY CHANGE DUE DETAILED DESIGN CONSIDERATIONS.
4. THIS CONFIGURATION AND DIMENSIONS DEPENANT ON THE USE OF HUGHES/JVC VIDEO LENS RATIO 1.2 WITH 156" THROW DISTANCE TO SCREEN.

SUBMITTAL REVIEW
☒ APPROVED
☐ APPROVED AS NOTED
☐ REVISE AS NOTED & RESUBMIT
COMPANY: U of U
SIGNED: Rick Jensen
TITLE: PROJ. MGR DATE: 8-18-99

REV.	DATE	DESCRIPTION	MADE	APPR.

DAKTRONICS, INC.
BROOKINGS, SOUTH DAKOTA 57006

UNIVERSITY OF UTAH/HUNTSMAN CENTER

HOIST INSTALLATION

DRAWING NUMBER: 1043-E07C-64719	SCALE: 40:1
DESIGNED: VERN V	DRAWN: VERN V
DATE: 11 AUG 94	DATE: 11 AUGUST 94
CHECKED:	APPROVED:
DATE:	DATE:

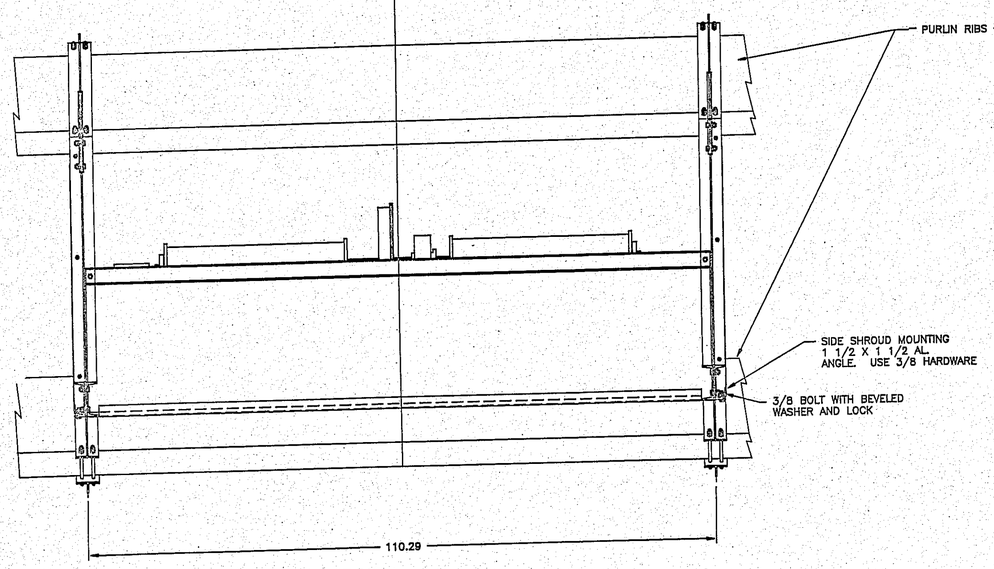

FRONT VIEW

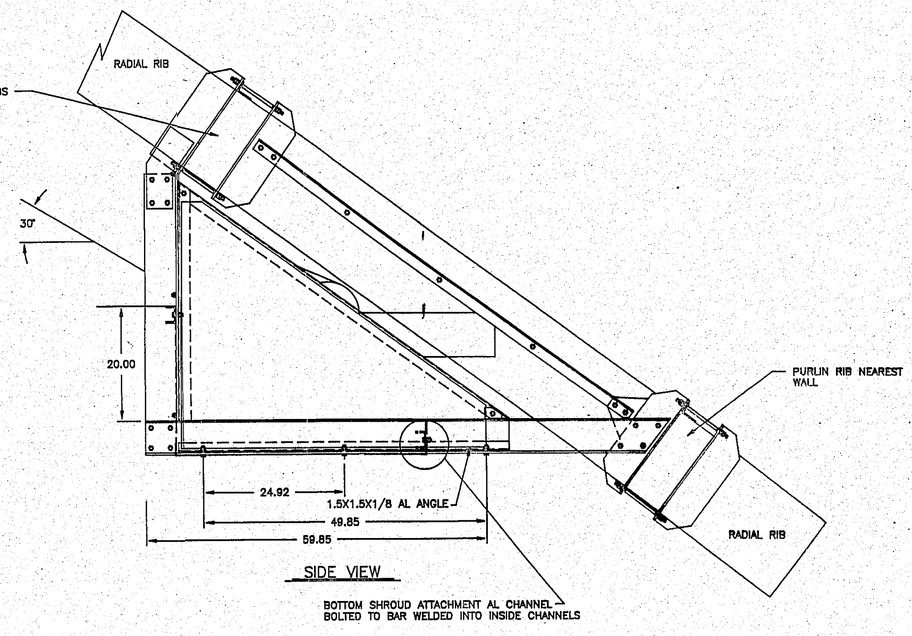

SIDE VIEW

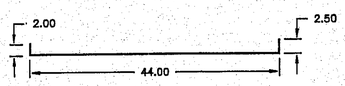

END VIEW OF BOTTOM SHROUD

NOTES:

1. SEE DRAWING 1043-E10C-74340 FOR HOIST LOCATION AND OTHER INFORMATION.
2. PROPOSAL SBJECT TO STRUCTURAL ENGINEER'S APPROVAL AND SITE DESIGN CONFIRMATION REVIEW.
3. SHROUD TO BE OF ALUMINIUM. .125 THICK ON BOTTOM AND FRONT. SIDES TO BE .063 THICK
4. COLOR TO BE SPECIFIED

REV.	DATE	DESCRIPTION	BY	APPR.

DAKTRONICS, INC. BROOKINGS, SD 57006

PROJ: MONTANA STATE U.

TITLE: HOIST SHROUD DETAILS

DES. BY: VERN V. DRAWN BY: VERN V DATE: 19 SEPT

APPR. BY:

SCALE: 1=15

1043-E07C-7503

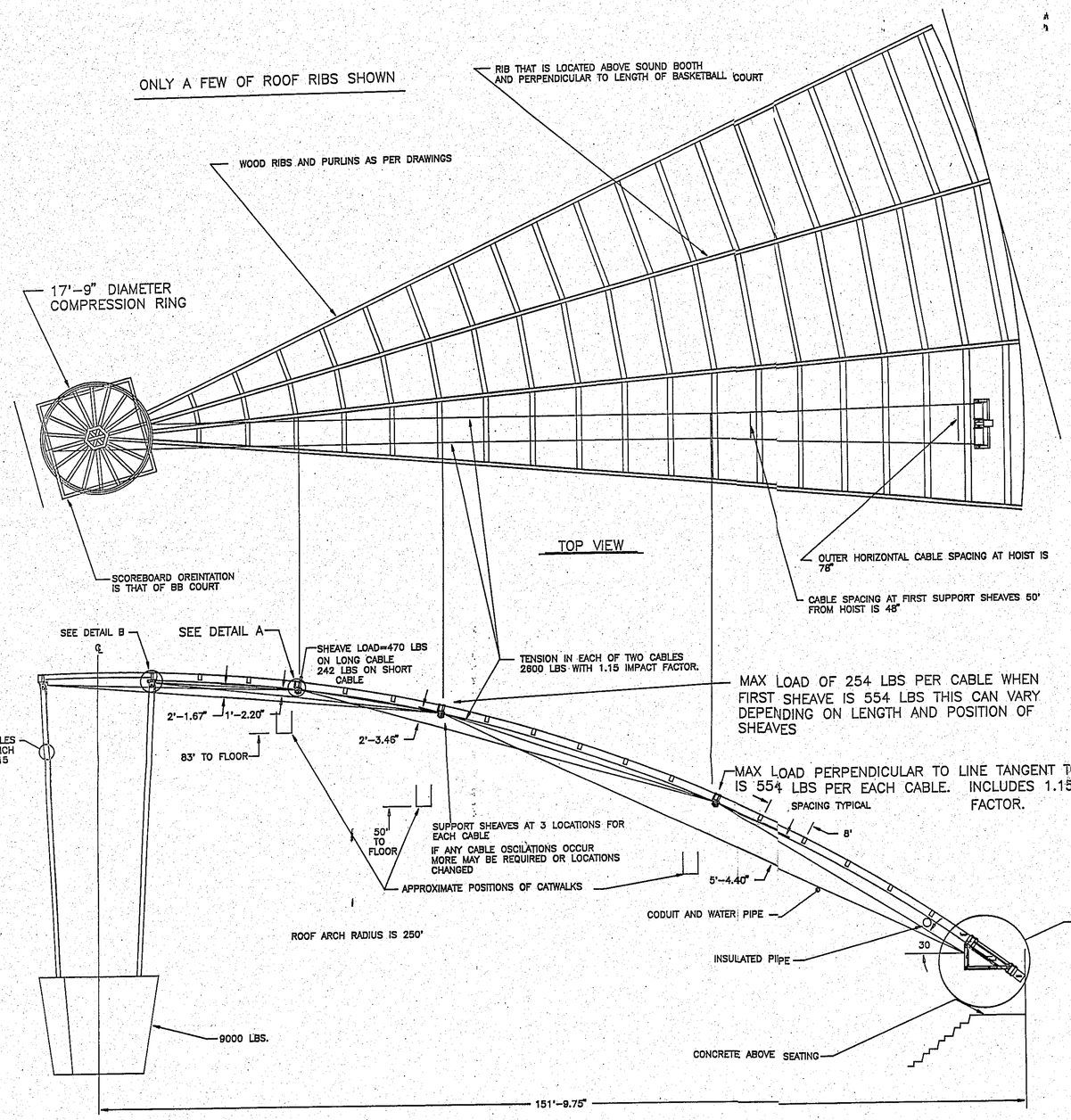

ELEVATION VIEW

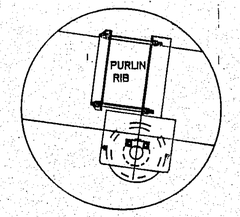

DETAIL A

MOUNTING TYPICAL 6 PLACES
ALSO SEE DRAWING #74856

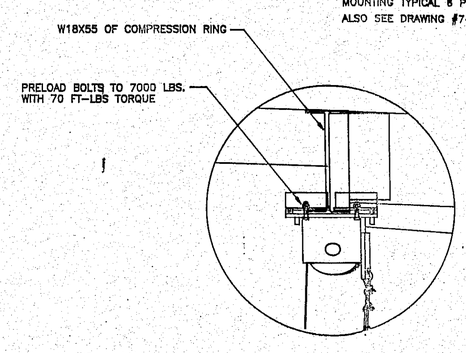

DETAIL B

ALSO SEE DRAWINGS #74764 AND #75070

NOTES:

1. SCOREBOARD WEIGHT= APPROXIMATELY 9000 LBS.
2. HOIST WEIGHT= APPROXIMATELE 2700 LBS. WITH SUPPORT STRUCTURE
3. FACILITY IS RESPONSIBLE FOR PROVIDING WRITTEN VERIFICATION THAT ROOF STRUCTURE IS CAPABLE OF SUPPORTING THE LOADS DESCRIBED
4. HOIST VOLTAGE IS 208 3 PH
5. ALL STEEL ASTM A 35 UNLESS OTHERWISE SPECIFIED
7. THIS PROPOSAL MADE SUBJECT TO SEISMIC LATERAL BRACING REQUIRMENT BEING ELIMINATED FOR SUSPENDED SCOREBOARD. SEE ATTACHMENTS CONCERNING THIS REQUIREMENT.
7. DESIGN DETAILS TO BE SUBMITTED FOR APPROVAL AFTER RECEIPT OF ORDER, CONCEPT APPROVAL AND RECEIPT OF FINAL HOIST DESIGN FROM HOIST MANUFACTURER.

REV.	DATE	DESCRIPTION	BY	APPR.
1	9/20/95	ADDED DETAILS OF SHEAVE BLOCKS AND LOADS	V.V.	V.V.

DAKTRONICS, INC. BROOKINGS, SD 57006

PROJ: M.S.U. BOZEMAN MONTANA

TITLE: SCOREBOARD SUSPENSION SYSTEM

DES. BY: VERN V. DRAWN BY: VERN V. DATE: 23 AUG

APPR. BY: /

SCALE: 1:150

1043-E10C-7434

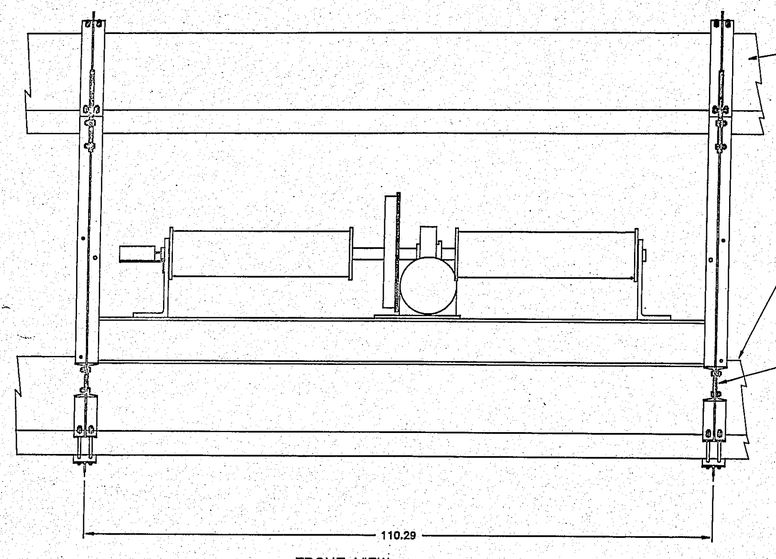

FRONT VIEW

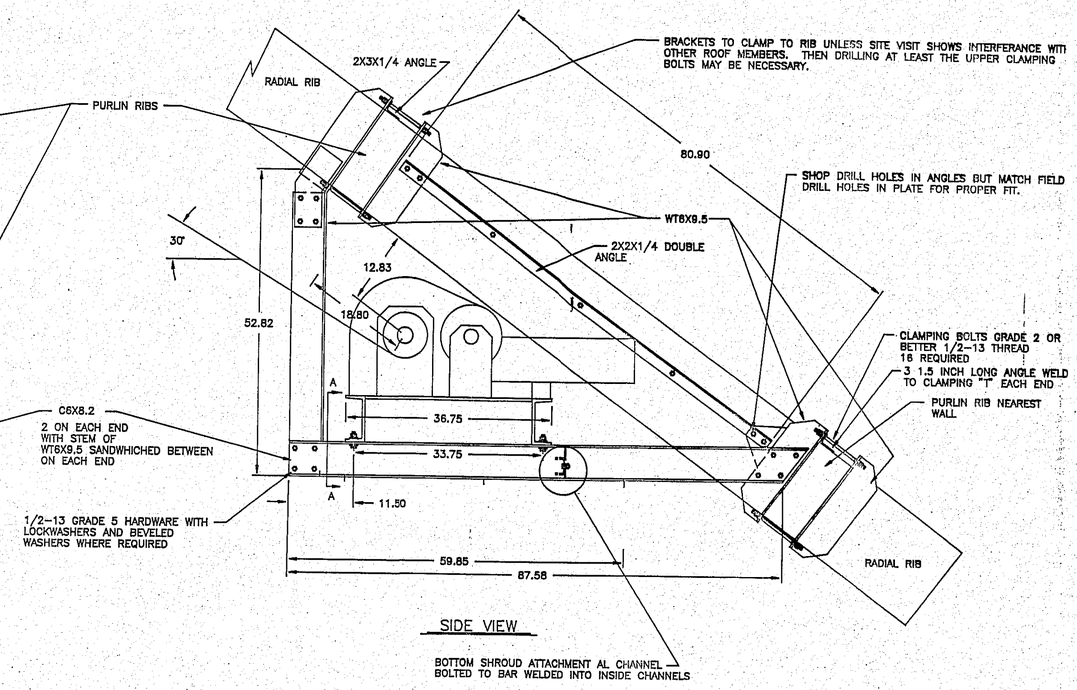

SIDE VIEW

NOTES:

1. SEE DRAWING 1043-E10C-74340 FOR HOIST LOCATION AND OTHER INFORMATION.
2. PROPOSAL SUBJECT TO STRUCTURAL ENGINEER'S APPROVAL AND SITE DESIGN CONFIRMATION REVIEW.
3. LATERAL BRACING OF PURLIN RIBS, IF REQUIRED, TO BE DETERMINED BY STRUCTURAL ENGINEER.
4. TENSION LOAD ON EACH CABLE AT 30 DEGREES IS 2600 LBS WHICH INCLUDES A 1.15 IMPACT FACTOR
5. ESTIMATED HOIST WEIGHT = 1900 LBS
   ESTIMATED HOIST MOUNTING BRACKED AND SHROUD WEIGHT = 800 LBS
6. SEE DRAWING 1043-E07C-75037 FOR HOIST SHROD DETAIL COVERAGE

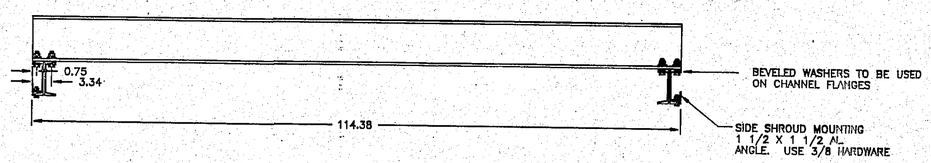

SECTION VIEW A-A

REV.	DATE	DESCRIPTION	BY	APPR.

DAKTRONICS, INC. BROOKINGS, SD 57006

PROJ: MONTANA STATE U.

TITLE: HOIST MOUNTING BRACKET DETAILS

DES. BY: VERN V. DRAWN BY: VERN V. DATE: 18 SEPT 9

APPR. BY:

SCALE: 1=1.5

1043-E07C-74855