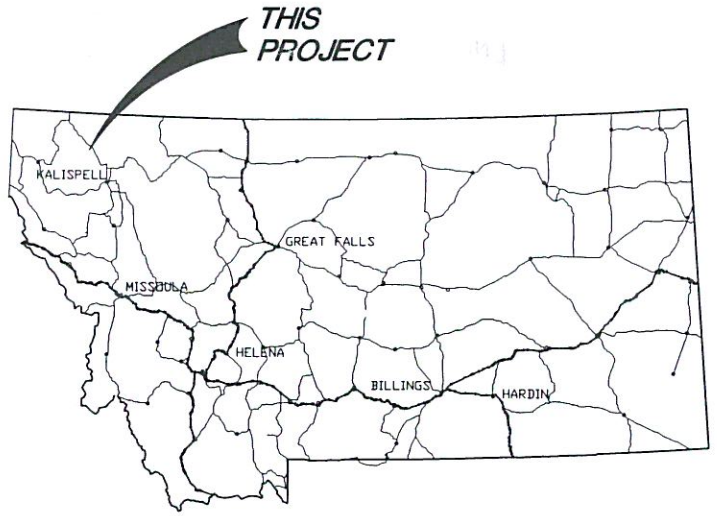

MONTANA INDEX MAP

STATE OF MONTANA

ROAD AND BRIDGE PLANS
FOR

FITZSIMMONS CREEK

DEPARTMENT OF NATURAL RESOURCES
STILLWATER UNIT
LOCATED IN THE STILLWATER STATE FOREST
LINCOLN COUNTY, MONTANA

INDEX TO SHEETS

NO.	DESCRIPTION
	TITLE SHEET
1	ROADWAY PLAN & PROFILE
2	ROADWAY DETAILS
3	BRIDGE GENERAL PLAN
4	FOUNDATION PLAN & DETAILS
5	ABUTMENT DETAILS
6	SUPERSTRUCTURE PLAN AND DETAILS
7	SUPERSTRUCTURE DETAILS
1–4	ROADWAY CROSS SECTIONS

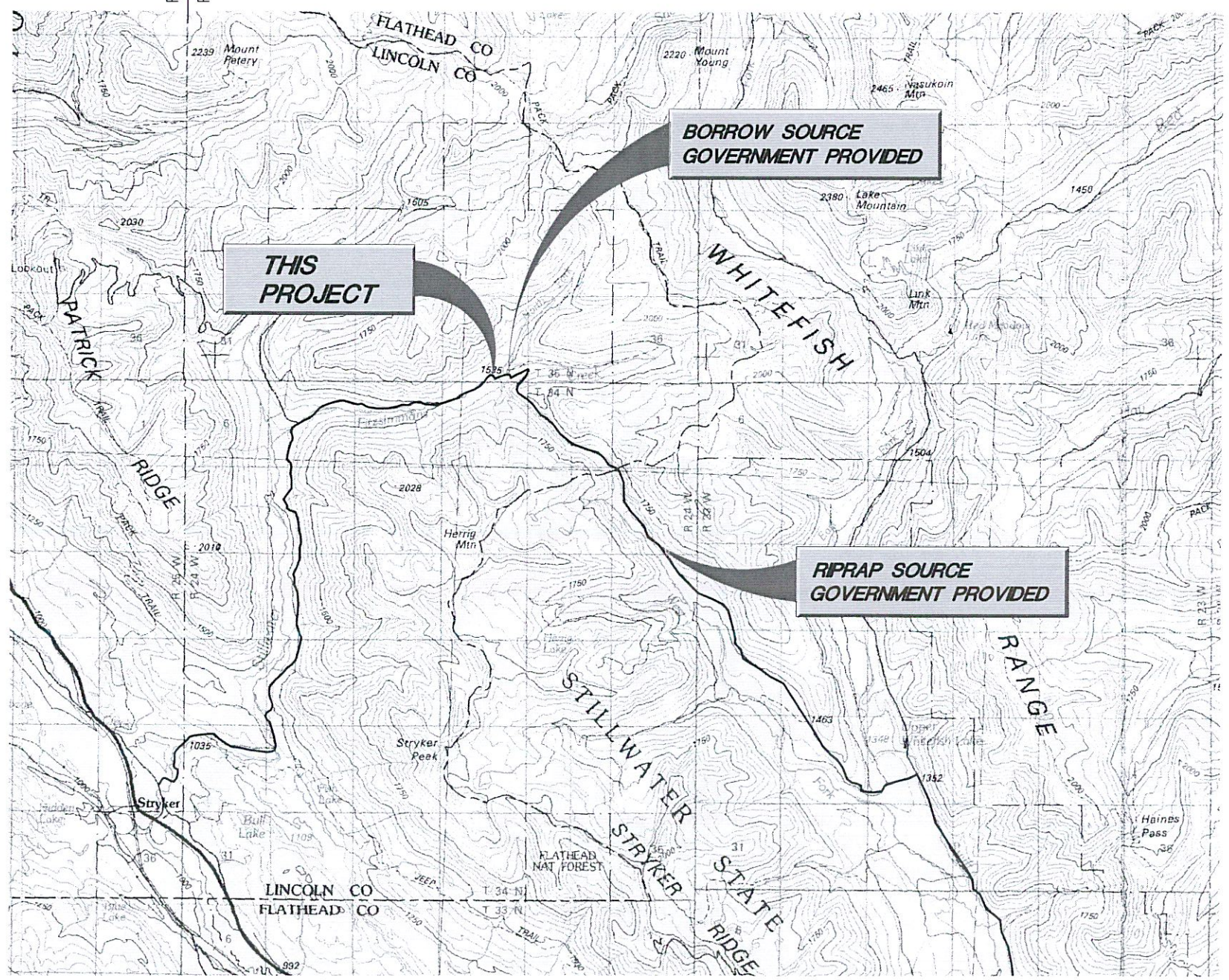

VICINITY MAP

CRUSHED AGGREGATE SOURCE
CONTRACTOR PROVIDED
COMMERCIAL SOURCE

REVIEWED:

_____ DATE _____

FOREST ENGINEER
DEPARTMENT OF NATURAL RESOURCES
NORTHWESTERN LAND OFFICE

APPROVED

_____ DATE _____

UNIT MANAGER
DEPARTMENT OF NATURAL RESOURCES
STILLWATER UNIT

MONTANA
MICHAEL THOMAS JENSEN
13098PE
REGISTERED
PROFESSIONAL ENGINEER
12/31/99

DJ&A, P.C.
CONSULTING ENGINEERS & LAND SURVEYORS
3203 Russell Street, Missoula, Montana 59801-8591
Phone 406/721-4320 Fax 406/549-6371

F:\4056\...\CS.DWG

ROADWAY C/L – COORDINATE TABLE

Point	Station	Northing	Easting	Elevation	Description
700	0+00.00	30080.89	14855.85	3010.31	Centerline
701	0+25.00	30074.03	14879.89	3008.97	Centerline
702	0+50.00	30067.16	14903.93	3007.08	Centerline
703	0+52.51	30066.47	14906.34	3006.89	Centerline–PC
704	0+75.00	30058.04	14927.14	3005.36	Centerline
705	1+00.00	30043.73	14947.57	3004.34	Centerline
706	1+12.00	30035.23	14956.03	3004.13	Centerline
707	1+25.00	30025.00	14964.04	3004.08	Centerline
708	1+40.00	30012.07	14971.63	3004.28	Centerline
709	1+50.00	30002.91	14975.63	3004.48	Centerline
710	1+60.29	29993.14	14978.82	3004.69	Centerline–PT
800	1+63.40	29990.13	14979.64	3004.72	C/L Brg. Abut. 1
801	2+21.40	29934.18	14994.90	3004.72	C/L Brg. Abut. 2
715	2+23.50	29932.15	14995.45	3004.71	Centerline
716	2+25.00	29930.70	14995.84	3004.68	Centerline
717	2+50.00	29906.59	15002.42	3004.41	Centerline
718	2+75.00	29882.47	15009.00	3005.11	Centerline
719	2+90.00	29867.99	15012.95	3006.02	Centerline
720	3+00.00	29858.35	15015.58	3006.83	Centerline
721	3+06.13	29852.43	15017.19	3007.40	Centerline–PC
722	3+15.00	29843.93	15019.71	3008.34	Centerline
723	3+25.00	29834.49	15023.01	3009.43	Centerline
724	3+40.00	29820.67	15028.82	3011.01	Centerline
725	3+50.00	29811.71	15033.26	3012.02	Centerline
726	3+65.00	29798.72	15040.76	3013.48	Centerline
727	3+75.00	29790.38	15046.28	3014.41	Centerline
728	3+87.42	29780.43	15053.72	3015.53	Centerline–PT

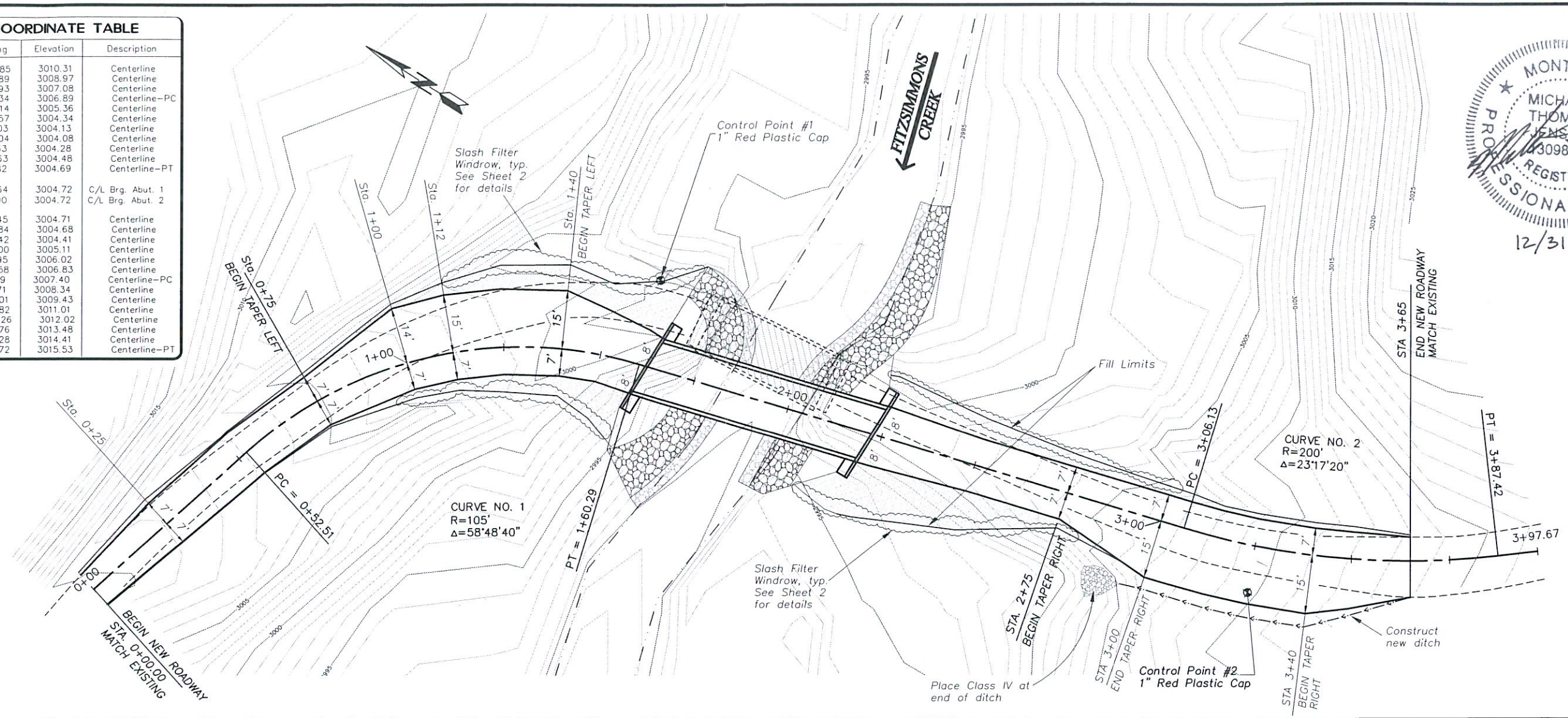

MONTANA
MICHAEL THOMAS JENSEN
13098PE
REGISTERED
PROFESSIONAL ENGINEER
12/31/99

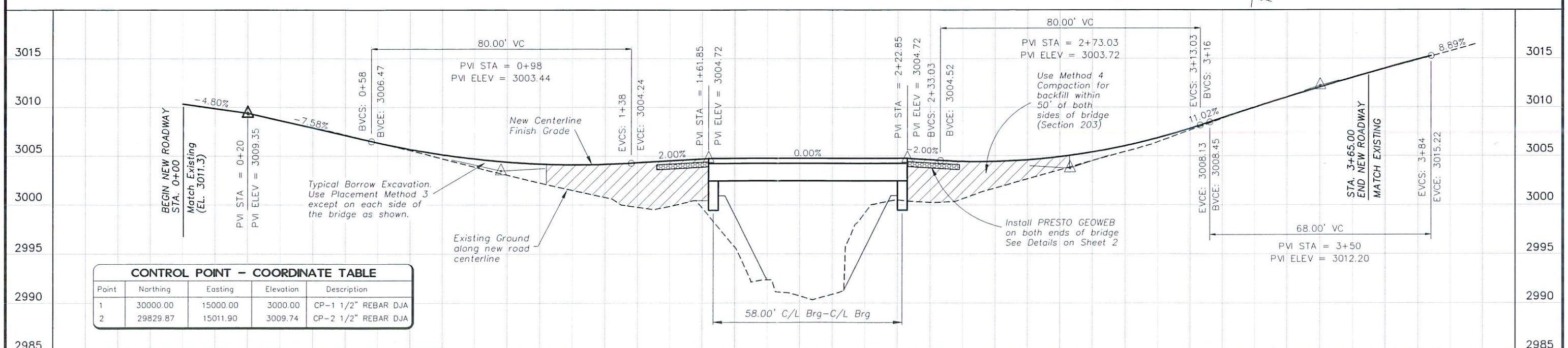

CONTROL POINT – COORDINATE TABLE

Point	Northing	Easting	Elevation	Description
1	30000.00	15000.00	3000.00	CP–1 1/2" REBAR DJA
2	29829.87	15011.90	3009.74	CP–2 1/2" REBAR DJA

BY	DATE	REVISION DESCRIPTION

F:\4056\fitzsimmons\final\planopro.dwg 12/20/99 4:03 pm

DESIGN MTJ PROJ. NO. 4056
DRAWN MTJ DATE 12/99
CHECKED VA

DJ&A, P.C.
CONSULTING ENGINEERS & LAND SURVEYORS
3203 Russell Street, Missoula, Montana 59801-6591
Phone 406/721-4320 Fax 406/549-6371

DNRC
STILLWATER STATE FOREST
BRIDGE PROJECTS

FITZSIMMONS CREEK
ROADWAY PLAN AND PROFILE

SHEET 1 OF 7

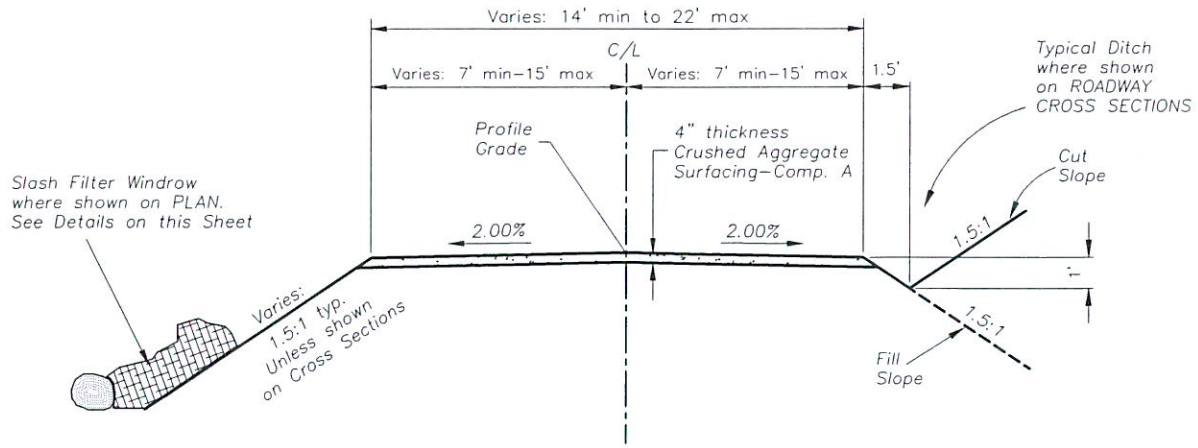

TYPICAL SECTION

NO SCALE

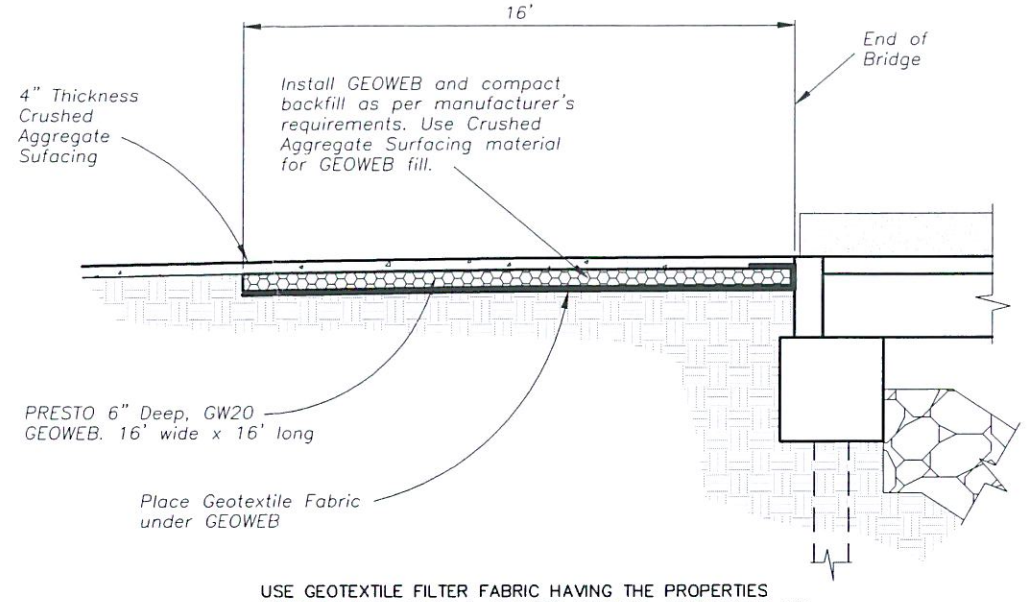

USE GEOTEXTILE FILTER FABRIC HAVING THE PROPERTIES SPECIFIED FOR CLASS A, EROSION CONTROL APPLICATION OF AASHTO STANDARD SPECIFICATION M288, TABLE 1A.

GEOWEB is a product of PRESTO PRODUCTS Co., P.O. Box 2399, APPLETON, WI 54912-2399, Tel. 800-548-3424.

TYPICAL GEOWEB INSTALLATION

NO SCALE

QUANTITY SUMMARY

ESTIMATED QUANTITIES*

ITEM	DESCRIPTION	ITEM	QUANTITY
201	CLEARING AND GRUBBING	L.S.	1
201	SLASH FILTER WINDROW	L.F.	300
202	REMOVAL & DISPOSAL OF EXISTING LOG BRIDGE	L.S.	1
202	REMOVAL & HAUL OF EXISTING STEEL BRIDGE	L.S.	1
203	BORROW EXCAVATION, PLACEMENT METHOD 3	C.Y.	58
203	BORROW EXCAVATION, PLACEMENT METHOD 4	C.Y.	407 **
204	SILT FENCE	L.F.	300
204	SOIL EROSION AND POLLUTION CONTROL	L.S.	1
206	EXCAVATION FOR BRIDGE STRUCTURE	C.Y.	6
304	PLACING AGGREGATE, COMPACTION A	C.Y.	70
551	STEEL PIPE PILES, FURNISHED	L.F.	375
551	STEEL PIPE PILES, DRIVEN	L.F.	300
551	PILE SHOES	EA	10
552	STRUCTURAL CONCRETE, CLASS A	C.Y.	17
553	PRESTRESSED CONCRETE TRIDECK MEMBER	EA	3
553A	PRECAST CONCRETE WINGWALLS	EA	4
554	REINFORCING STEEL	LBS	1610
601	MOBILIZATION	L.S.	1
619	MACHINE PLACED RIPRAP, CLASS VII	C.Y.	275
619	MACHINE PLACED RIPRAP, CLASS IV	C.Y.	10
619	GEOTEXTILE WITH GRAVEL CUSHION	S.Y.	310
625	SEEDING, (WITHOUT MULCH) WITH FERTILIZER	ACRE	0.15
633	WOOD POSTS	L.F.	36
633	OBJECT MARKERS	EA	4

* FOR INFORMATIONAL PURPOSES ONLY- DO NOT USE FOR BIDDING, SEE BID LIST

** Includes backfill under Pile Cap

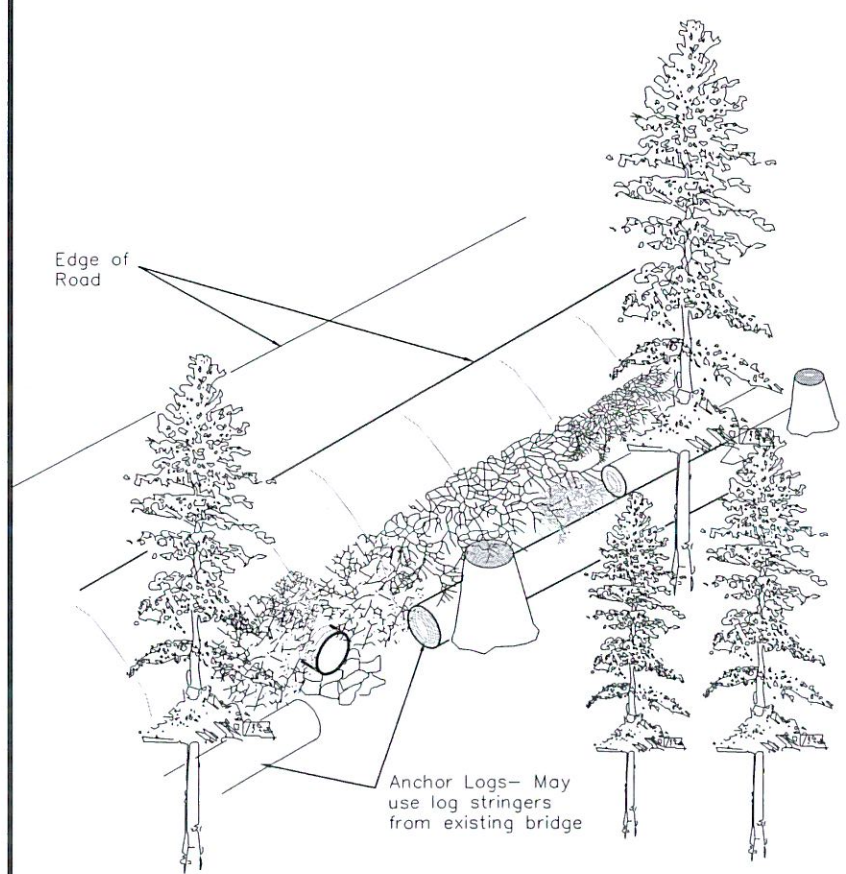

TYPICAL INSTALLATION

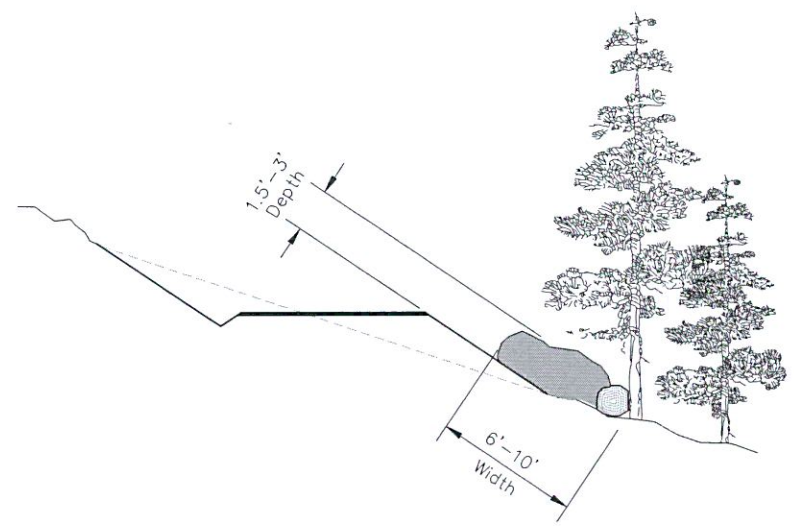

WINDROW DIMENSIONS

SLASH FILTER WINDROW NOTES:

1.) Slash material is available on State Lands within 2 miles of the site (Goverment Provided). Stockpile materials before constructing windrows.
2.) Place cull logs ("Anchor Logs") at the toe of the fill.
3.) Slash, limbs and tops must be smaller than 12 feet long and 6 inches diameter. Do not use stumps and root wads. Use Anchor Logs larger than 16 inches in diameter. Reasonably sound cull logs may be used.
4.) Place slash above the logs with a backhoe and tamp into place with the bucket. Slash should be tamped so it is embedded approximately 6 inches into the surface to prevent water from running under the windrow.
5.) Do not interfere with the functioning of drainage structures or block stream channels with windrows. All locations will be staked or flagged by the Engineer.

SLASH FILTER WINDROW

No Scale

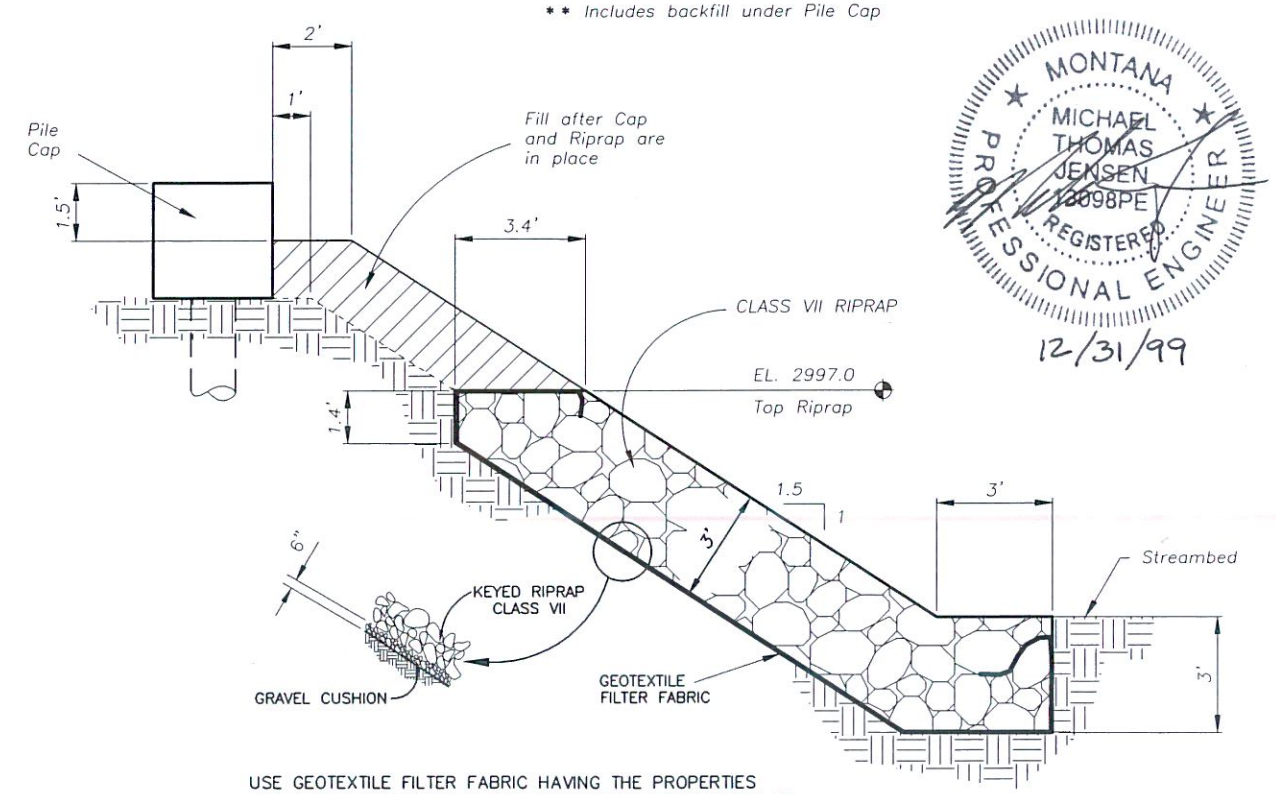

USE GEOTEXTILE FILTER FABRIC HAVING THE PROPERTIES SPECIFIED FOR CLASS A, EROSION CONTROL APPLICATION OF AASHTO STANDARD SPECIFICATION M288, TABLE 1A.

BANK/BRIDGE RIPRAP DETAIL

NO SCALE

MONTANA MICHAEL THOMAS JENSEN 13098PE REGISTERED PROFESSIONAL ENGINEER

12/31/99

BY	DATE	REVISION DESCRIPTION

F:\4056\fitzsimmons\final\planopro.dwg 12/20/99 4:03 pm

DESIGN MTJ PROJ. NO. 4056
DRAWN MTJ DATE 12/99
CHECKED VA

DJ&A, P.C.
CONSULTING ENGINEERS & LAND SURVEYORS
3203 Russell Street, Missoula, Montana 59801-6591
Phone 406/721-4325 Fax 406/549-6371

DNRC
STILLWATER STATE FOREST
BRIDGE PROJECTS

FITZSIMMONS CREEK
ROADWAY DETAILS

SHEET 2 OF 7

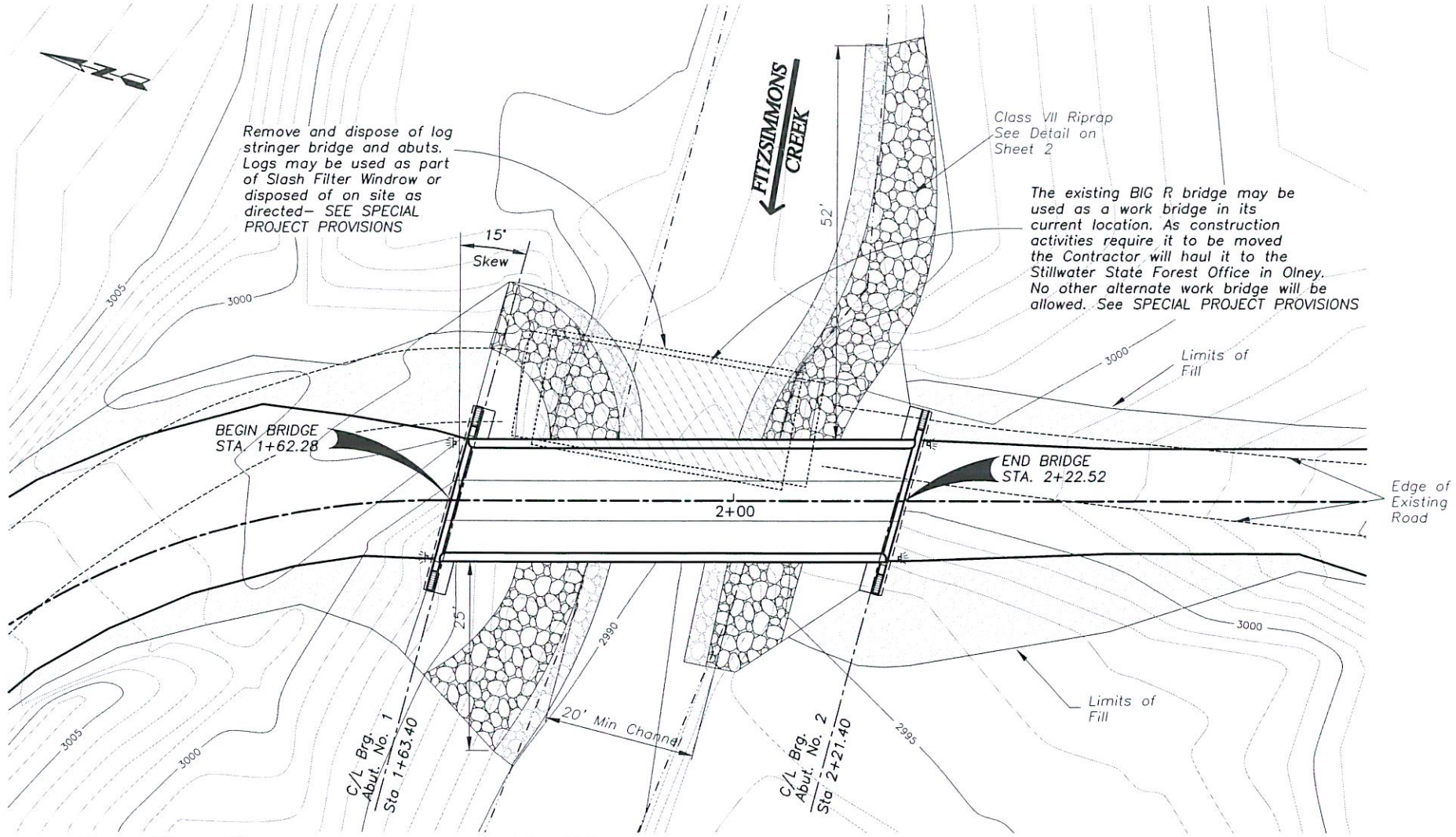

PLAN

Scale: 1" = 20'–0"

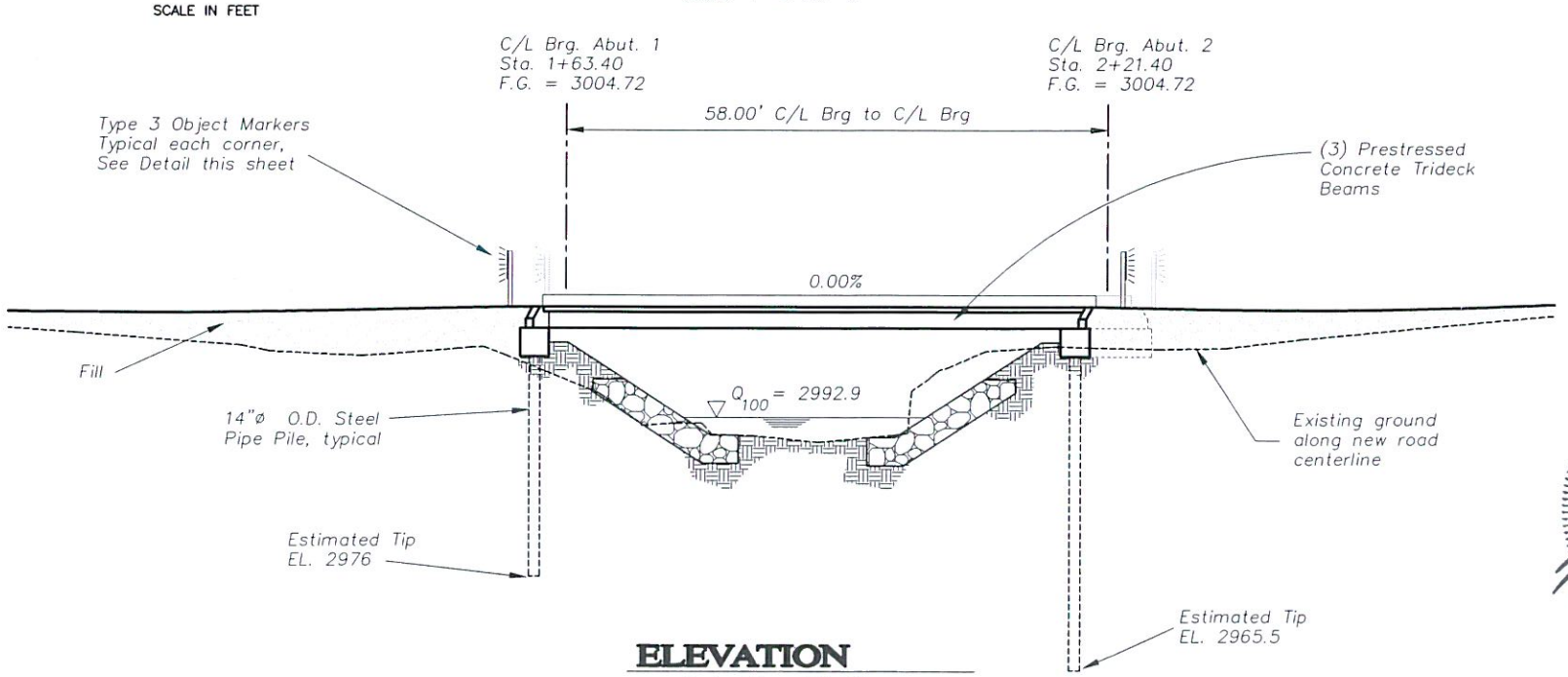

ELEVATION

Scale: 1" = 20'–0"

GENERAL NOTES:

SPECIFICATIONS: Materials and construction of this structure shall be in accordance with the 1985 USDA Forest Service Specifications for Construction of Roads and Bridges, as modified for this contract.

DESIGN: This structure is designed for HS 20–44 loading in accordance with AASHTO Standard Specifications for Highway Bridges, 16th edition, 1996 and all interims. The prestressed beams must be designed to meet the criteria specified on Sheet 6 of 7.

HYDROLOGY AND HYDRAULICS: This structure is designed to pass a 100–year frequency flood with a stage elevation at 2992.9 (freeboard is 9.5 ft.). Q100 = 213 cfs.

CONCRETE: All cast–in–place concrete shall be CLASS A concrete, Fc' = 4000 psi. at 28 days. Cast–in–place concrete shall be given a Class 1 "ordinary surface finish". Cast–in–place concrete shall be air entrained 5% ±1%.

Precast concrete for wingwalls shall be Air Entrained Class P, F'c = 5000 psi at 28 days and having an entrained air content of 5% ±1%.

Prestressed concrete shall be Class "P". Concrete strength requirements shall be determined by the prestressed beam fabricator, but shall attain a minimum 28 day compressive strength of 6000 psi (F'c = 6000 psi). The top two inches of the prestressed beams shall be air entrained 5% ±1%.

All concrete shall be made in accordance with an approved mix design. Chamfer all exposed edges of concrete and fillet all re–entrant angles 3/4" unless otherwise noted.

REINFORCING STEEL: All non–prestressed reinforcing shall be of the deformed type conforming to AASHTO M31 (ASTM A615), Grade 60. Concrete cover shall be as shown; where not shown it shall conform to AASHTO. Cutting and bending shall conform to ACI 315.

PRESTRESSING STEEL: Prestressing steel shall be 1/2" diameter, seven wire low–relaxation prestressing strand conforming to AASHTO M203, Grade 270. Maximum jacking force for prestressing strand reinforcement shall be 0.85 f's or 35.14 kips. Maximum strand stress at at transfer shall be 0.75 f's or 31.00 kips.

HARDWARE AND STRUCTURAL STEEL: All steel shapes, plates and bars shall conform to AASHTO M183 (ASTM A36) and shall be galvanized in accordance with AASHTO M111 (ASTM A123) except when covered by 1 inch or more of concrete. All hardware shall conform to ASTM A307 except as noted and shall be galvanized in accordance with AASHTO M232 (ASTM A153) unless covered by 1 inch or more of concrete. All welding shall conform to the Structural Welding Code, AWS D1.1.

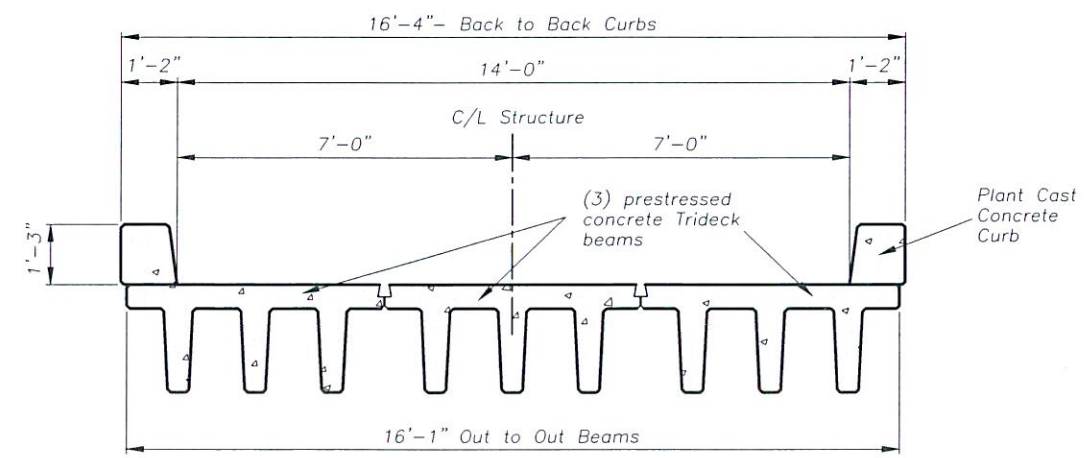

TYPICAL SECTION

Scale: 1/4" = 1'–0"

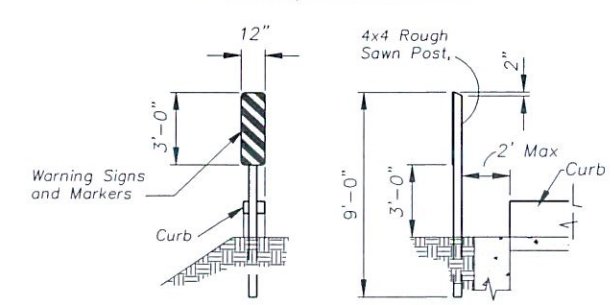

OBJECT MARKERS: Use 12"x 36" Type 3 object markers colored yellow and black. Use material meeting MUTCD OM–3L or OM–3R specifications. Fasten to post w/ (2) 1/4" ø machine bolts w/ washers. Field drill bolt holes. Install posts such that the inside edge of the reflectorized panel is on line with the inside edge of the curb.

OBJECT MARKER TYPE 3 INSTALLATION

Not to Scale

MONTANA MICHAEL THOMAS JENSEN 13098PE REGISTERED PROFESSIONAL ENGINEER

12/31/99

BY	DATE	REVISION DESCRIPTION

DESIGN MTJ PROJ. NO. 4056
DRAWN MTJ DATE 12/99
CHECKED VA

DJ&A, P.C.
CONSULTING ENGINEERS & LAND SURVEYORS
3203 Russell Street, Missoula, Montana 59801-6591
Phone 406/721-4325 Fax 406/549-6371

DNRC
STILLWATER STATE FOREST
BRIDGE PROJECTS

FITZSIMMONS CREEK
BRIDGE GENERAL PLAN

SHEET 3 OF 7

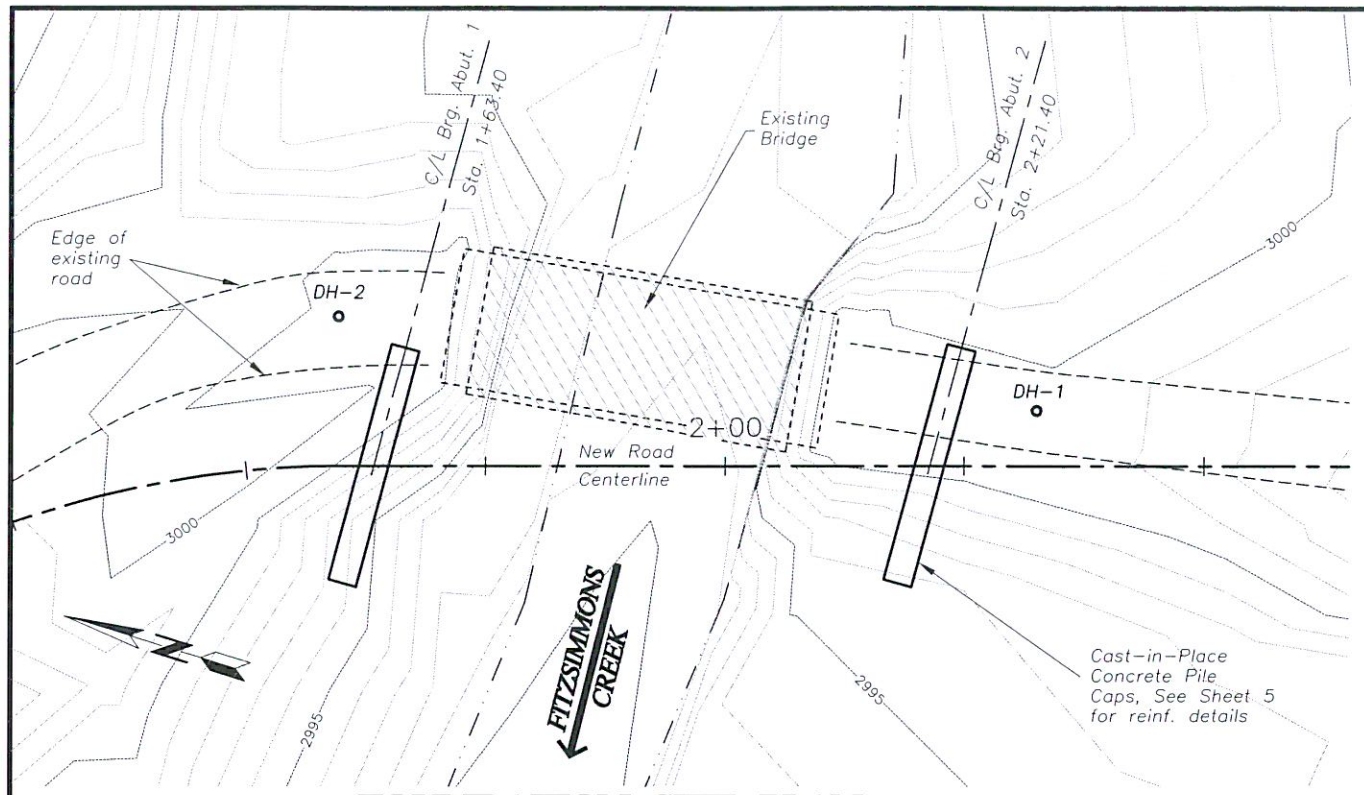

FOUNDATION SITE PLAN

Scale: 1" = 20'-0"

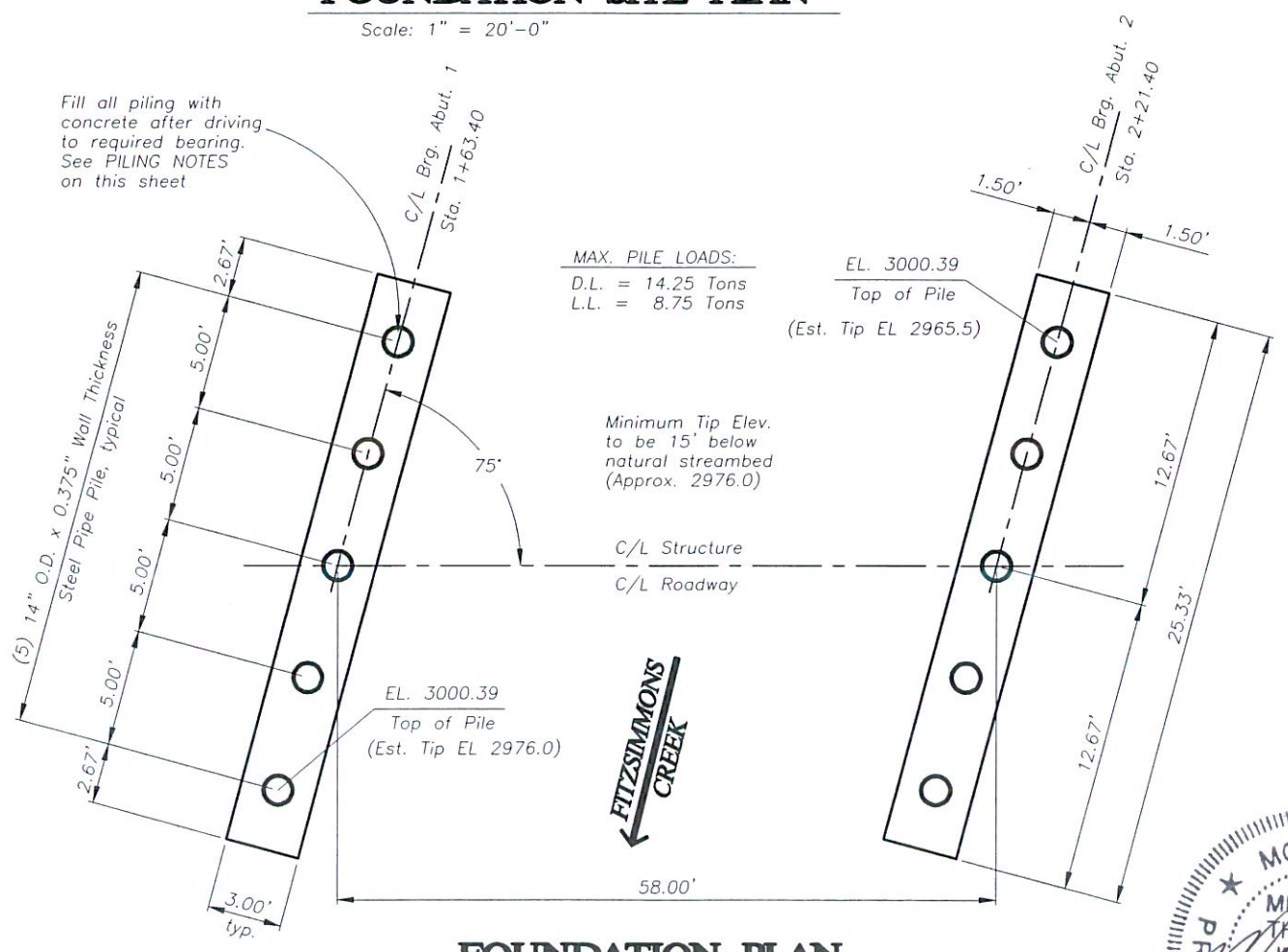

FOUNDATION PLAN

Not to Scale

LOCATION: Center of Road 22' South of S. end Temp. Bridge — LOG OF BORING DH-1 — SURF. EL.: 3000.3 — Gr. Water: 18.0 — DATE: 10/29/97

DEPTH FEET	SYMBOL	SAMPLE TYPE	N-BLOWS PER FOOT	MATERIAL DESCRIPTION	MOISTURE (%)	DRY DENSITY (PCF)	LIQUID LIMIT (%)	P.I. (%)	GRAVEL (%)	SAND (%)	SILT (%)	CLAY (%)
0.5		LSS	52	GRAVEL SURFACING	9							
3.1				FILL, Clayey Sand with Gravel very dense, very moist, subagular gravel, brown								
5 / 5.5		LSS	59	FILL, Poorly graded gravel with Silt and Sand Very dense, very moist, subrounded gravel, brown	6							
10		LSS	5	SILT with Sand Firm to stiff, very moist to saturated, faint laminations, silt lenses, light brown (ML) See Plate No. 1 for Lab Data	20				0	25	59	16
15		LSS	10	considerable lean clay lenses	34							
				See Plate Nos. 1& 3 for Lab Data								
19.7 / 20		ST	PUSH	SILT, stiff, saturated, laminated, some poorly graded sand lenses, light brown (ML)	26	102			0	3	84	13
		LSS	13	See Plate No. 1 for Lab Data	28				0	7	76	18
25		LSS	11	SILT, stiff, saturated, laminated, some poorly graded sand lenses, light brown (ML)	22							
30		LSS	9	See Plate No. 2 for Lab Data	25		25	3				
35		SK			28							
36.2				End of Boring @ 36.2'								

*SAMPLE TYPE KEY: LSS – LARGE SPLIT SPOON; ST – SHELBY TUBE; SK – SACK SAMPLE

LOCATION: Center of Road 12' North of N. end Temp. Bridge — LOG OF BORING DH-2 — SURF. EL.: 3000.3 — Gr. Water: 22.0 — DATE: 10/29/97

DEPTH FEET	SYMBOL	SAMPLE TYPE	N-BLOWS PER FOOT	MATERIAL DESCRIPTION	MOISTURE (%)	DRY DENSITY (PCF)	LIQUID LIMIT (%)	P.I. (%)	GRAVEL (%)	SAND (%)	SILT (%)	CLAY (%)
0.5		LSS	18	GRAVEL SURFACING	6							
3.0				FILL, Poorly Graded Gravel with Clay and Sand, medium dense, very moist subrounded gravel to 1", brown								
5		LSS	24	FILL, Clayey Sand with Gravel medium dense, very moist, some carbonaceous material, brown	14							
7.2				Poorly Graded GRAVEL with Sand, dense, wet, angular to subangular gravel, trace fines, brown (GP)								
10		LSS	43		10							
12.5				SILT, stiff to vey stiff, very moist to saturated, fine sand, brown (ML) See Plate Nos. 1 & 2 for Lab Data								
15		SK			24		25	3	0	8	67	26
20		LSS	14	poorly graded sand seams, laminated	31							
25		LSS	29	SILT, very stiff, saturated, fine sand, trace gravel, brown (ML)	21							
25.7				Silty SAND, medium dense, saturated, coarse sand, laminated, trace gravel, brown (SM)								
29.5 / 30		LSS	43	SILT, hard to very stiff, saturated, trace fine sand, brown (ML)	22							
35		LSS	22		19							
				End of Boring @ 36.0'								

*SAMPLE TYPE KEY: LSS – LARGE SPLIT SPOON; SK – SACK SAMPLE

PILING NOTES:

The piling shall be driven to a minimum bearing capacity of 23 tons as determined by formula (551.05) and shall be driven to the minimum tip elevation shown. Wave Equation Analysis is not required.

Use steel pipe conforming to ASTM A 252, Grade 2. All piling shall be fitted with metal shoes as detailed.

The Engineer may change the minimum pile penetration if practical refusal defined as 1/4" penetration in ten blows is encountered for two feet of penetration length and pile damage appears likely.

FILL ALL PILING WITH CLASS A CONCRETE, Fc' = 3000 psi. (No Air Entrainment Required.) after driving as per Section 551.10 of the Standard Specifications.

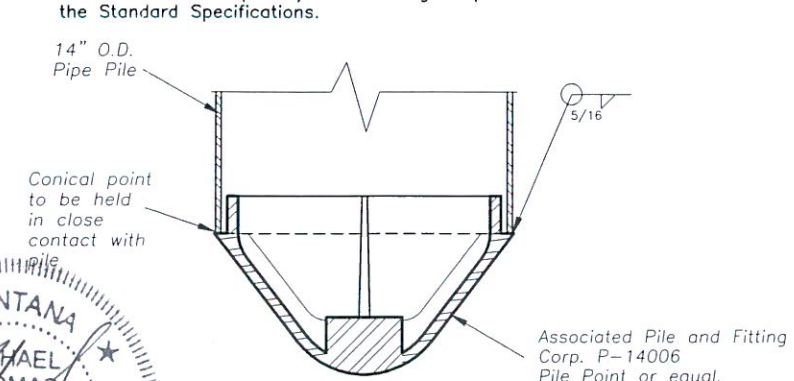

TYPICAL PILE POINT

Not to Scale

GEOTECHNICAL NOTES:

A Subsurface Investigation was conducted by NTL ENGINEERING & GEOSCIENCE, INC. of Great Falls, MT.

A copy of the Boring Logs have been provided on this sheet for informational purposes. A copy of the complete Subsurface Investigation may be obtained from DJ&A,PC. Boring Log information is given in feet as per original investigation.

Drill logs are interpretations of small diameter test holes and may or may not represent the material in the surrounding area.

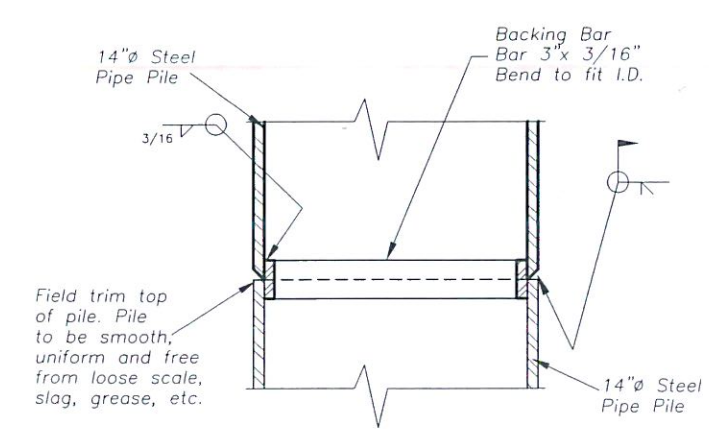

TYPICAL FIELD SPLICE

Not to Scale

MONTANA MICHAEL THOMAS JENSEN 13098PE REGISTERED PROFESSIONAL ENGINEER

12/31/99

BY	DATE	REVISION DESCRIPTION

DESIGN MTJ — PROJ. NO. 4056
DRAWN MTJ — DATE 12/99
CHECKED VA

DJ&A, P.C. CONSULTING ENGINEERS & LAND SURVEYORS 3203 Russell Street, Missoula, Montana 59801-6391 Phone 406/721-4320 Fax 406/549-6371

DNRC
STILLWATER STATE FOREST
BRIDGE PROJECTS

FITZSIMMONS CREEK
FOUNDATION PLAN AND DETAILS

SHEET 4 OF 7

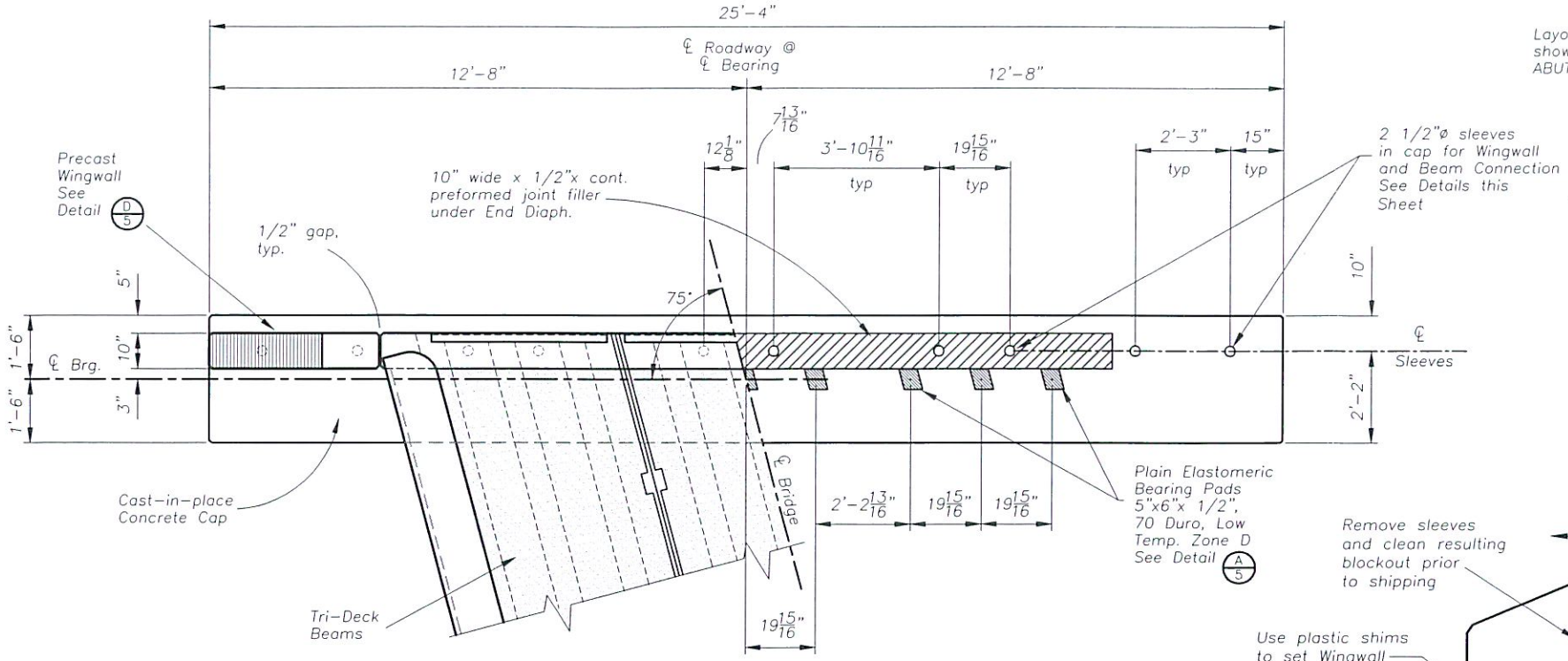

ABUTMENT PLAN

Abut. No. 1 Shown
Abut. No. 2 Sim.

Scale: 1/4" = 1'-0"

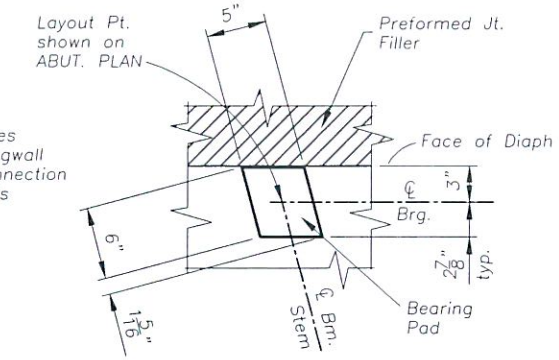

A/5 DETAIL

Not to Scale

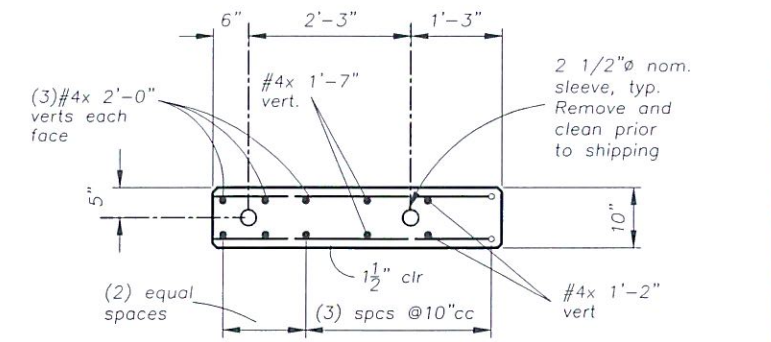

PLAN SECTION

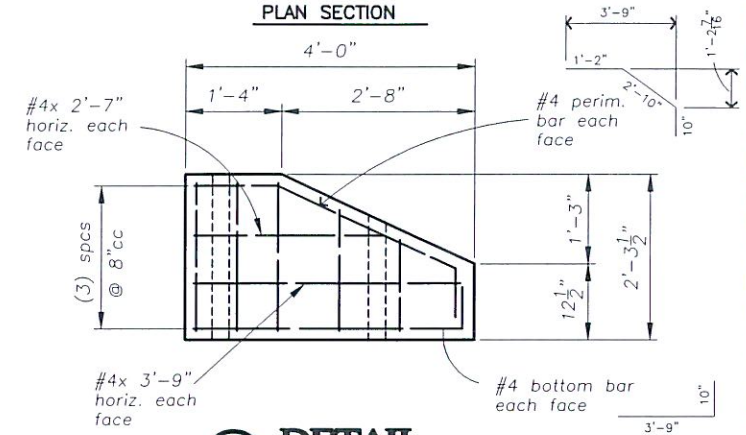

D/5 DETAIL

Scale: 3/8" = 1'-0"

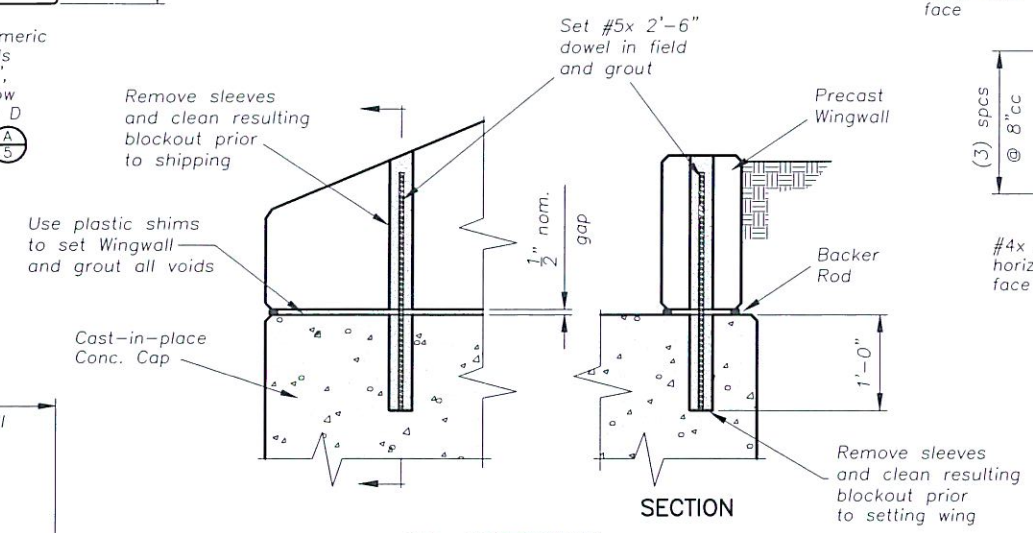

B/5 DETAIL

Scale: 1/2" = 1'-0"

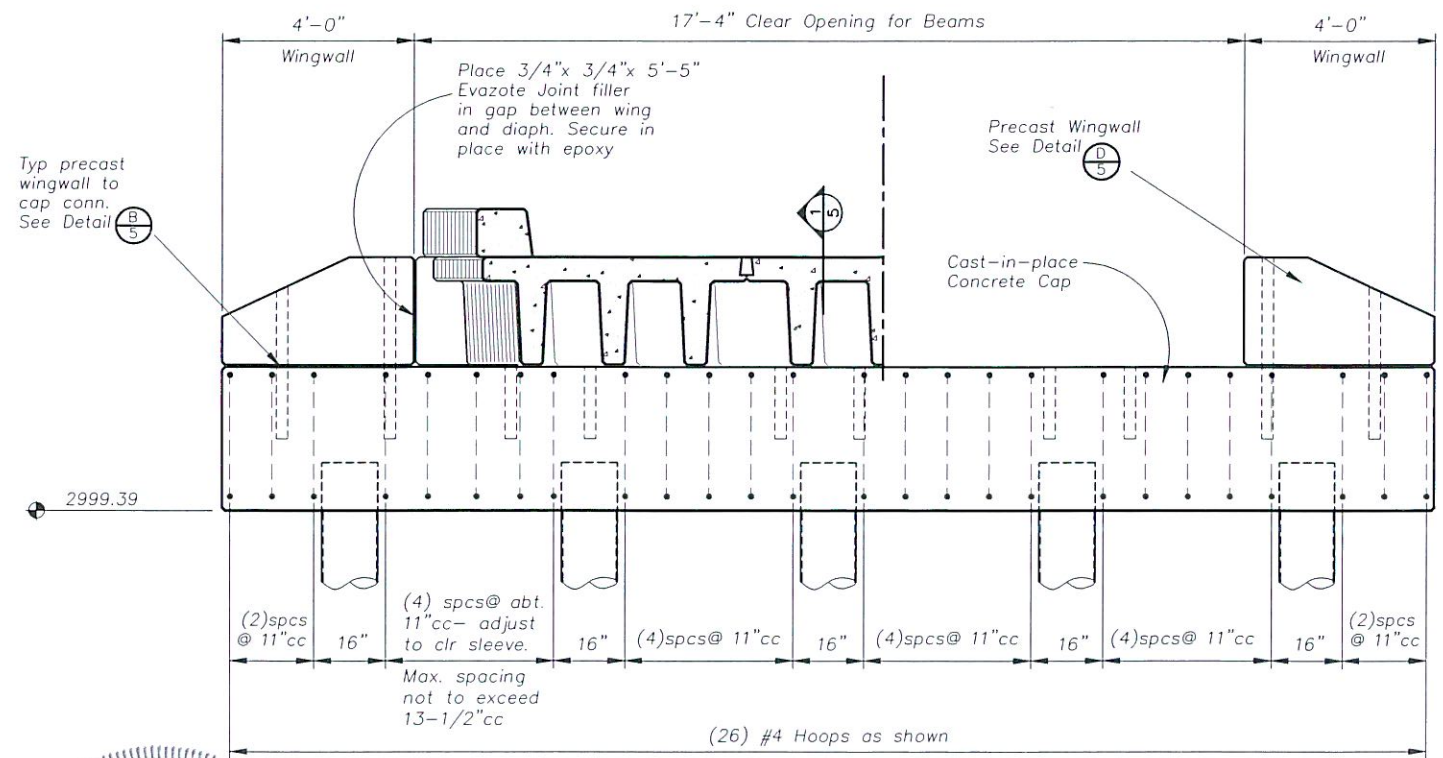

ELEVATION

LOOKING BACK ON LINE

Scale: 1/4" = 1'-0"

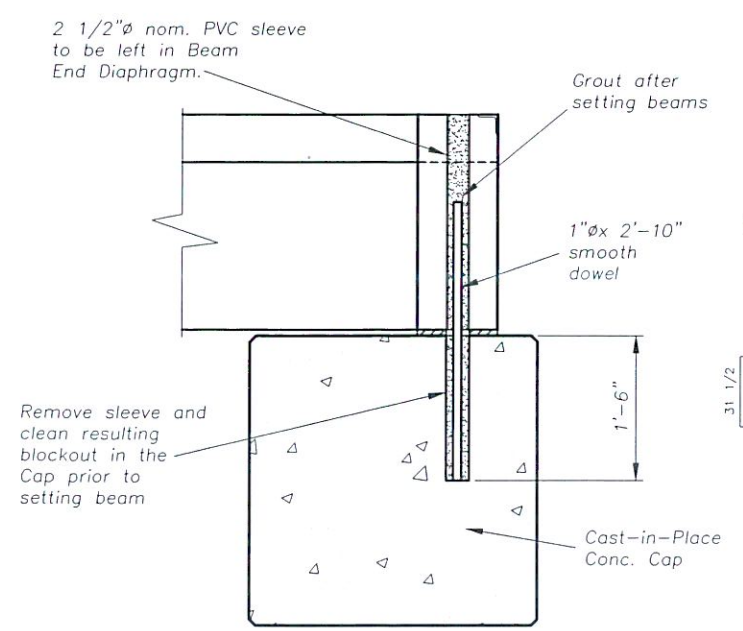

C/5 DETAIL

Scale: 1/2" = 1'-0"

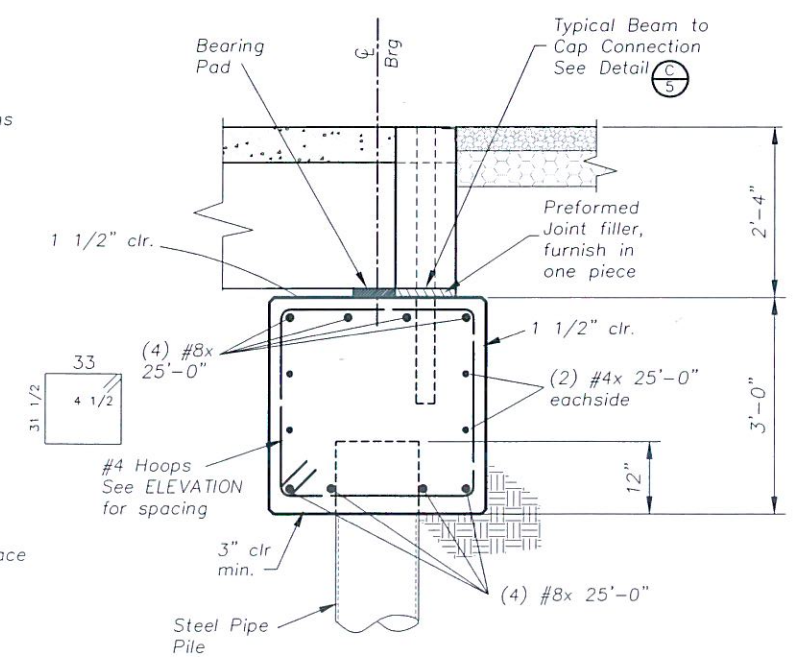

1/5 SECTION

Scale: 3/8" = 1'-0"

MONTANA MICHAEL THOMAS JENSEN 13098PE REGISTERED PROFESSIONAL ENGINEER

12/31/99

BY	DATE	REVISION DESCRIPTION

DESIGN MTJ PROJ. NO. 4056
DRAWN MTJ DATE 12/99
CHECKED VA

DJ&A, P.C.
CONSULTING ENGINEERS & LAND SURVEYORS
3203 Russell Street, Missoula, Montana 59801-6591
Phone 406/721-4320 Fax 406/549-6371

DNRC
STILLWATER STATE FOREST
BRIDGE PROJECTS

FITZSIMMONS CREEK
ABUTMENT DETAILS

SHEET 5 OF 7

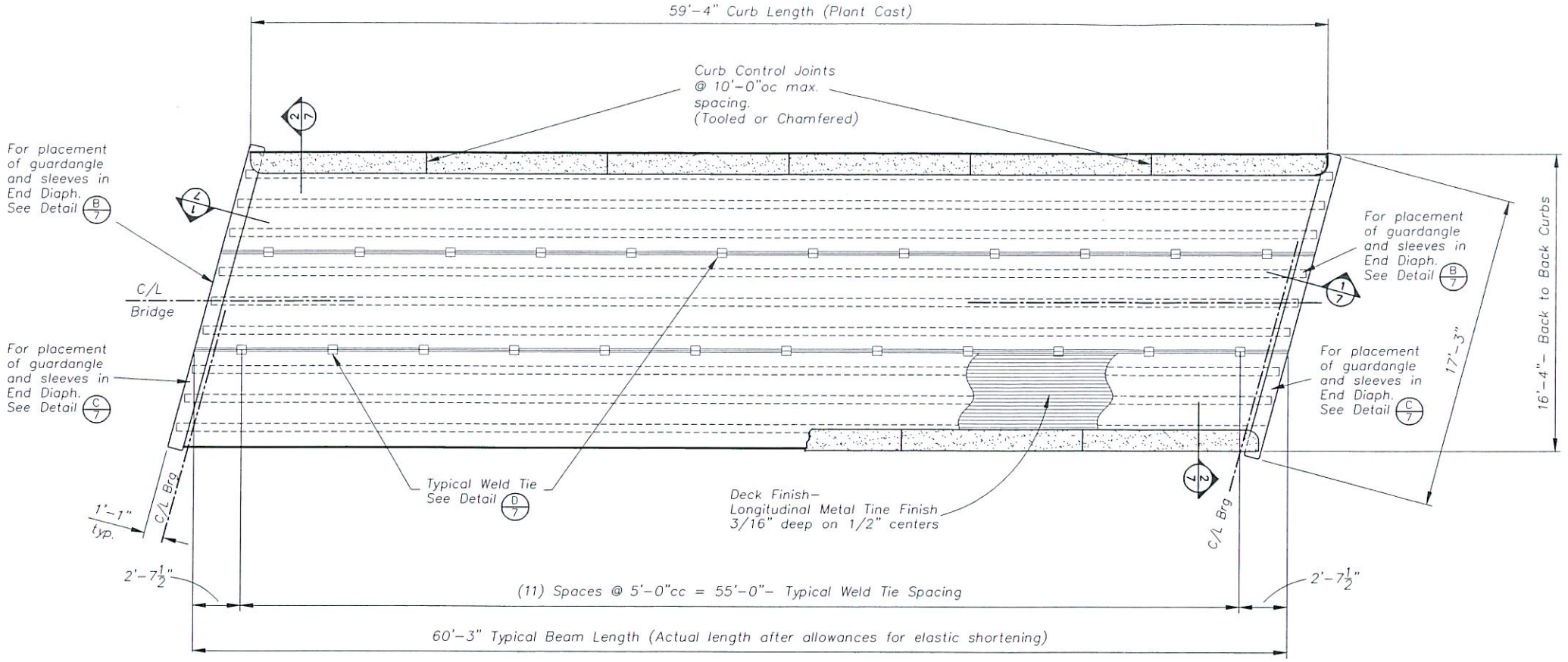

SUPERSTRUCTURE PLAN

Scale: 1/8" = 1'-0"

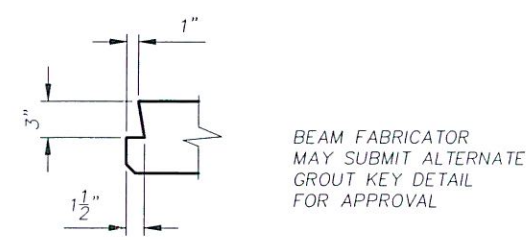

TYPICAL GROUT KEY

Scale: 3/4" = 1'-0"

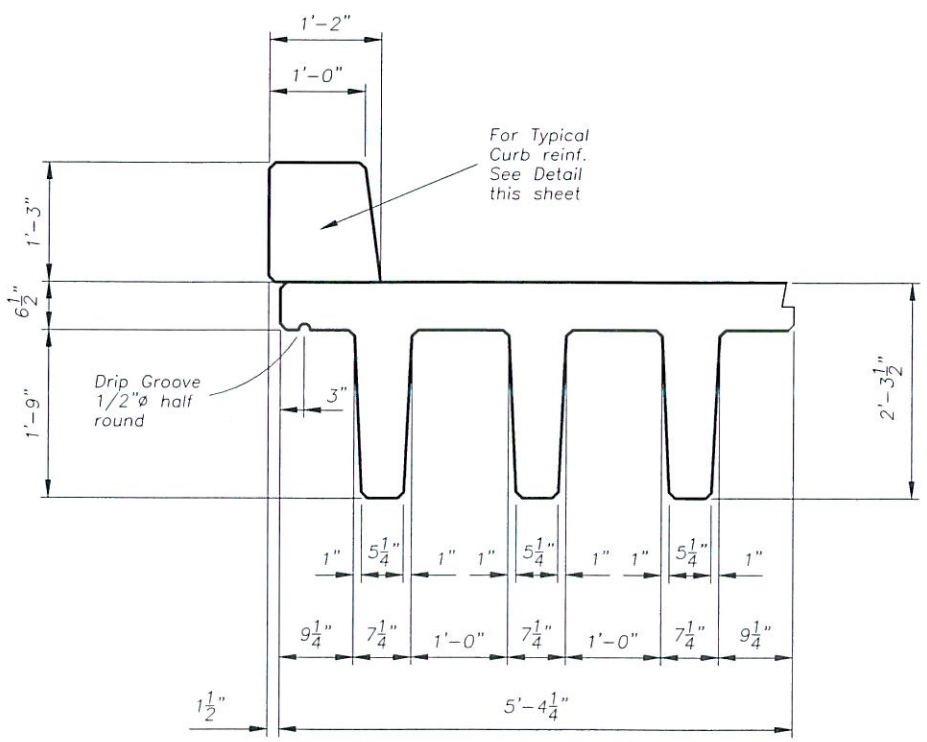

TYPICAL EXTERIOR BEAM

Scale: 1/2" = 1'-0"

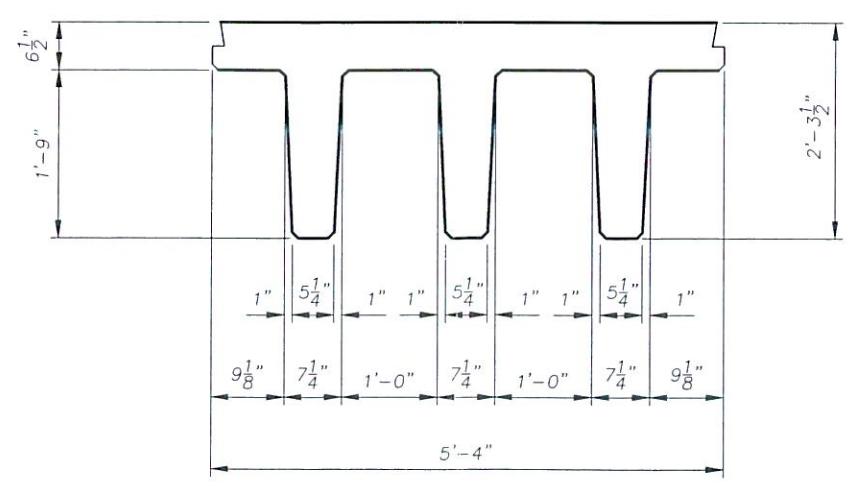

TYPICAL INTERIOR BEAM

Scale: 1/2" = 1'-0"

PRESTRESSED BEAM NOTES:

PRESTRESSED CONCRETE BEAM DESIGN: Pretensioning is the only acceptable method of prestressing for this project.

The prestress fabricator shall provide the final design for all prestressed reinforcement and non-prestressed reinforcement in the section shown on this sheet. The design shall verify that allowable stress and ultimate strength requirements are met at all stages of construction. The final design shall be prepared by a licensed professional engineer whose signed seal shall be on the design documents. This design shall be submitted with the details of method, materials and equipment proposed for use in the prestressing operation as noted below and in the Standard Specifications 553.02. See General Notes on Sheet 3 of 7 for additional design and material specifications.

An alternate section of precast, prestressed concrete only may be proposed. The connection to the substructure shall be as shown. The proposed alternate section may deviate 6" maximum in height and overall width must provide a 14 ft. clear opening between curbs. The finish grade elevation shall be maintained with adjustment made in the cap elevation. The alternate section must provide a minimum of 3 foot freeboard above the 100 year flood elevation shown on these Plans. The Contractor is responsible for revisions required in the end diaphragm reinforcement, these revisions shall be submitted with the beam design as noted below.

Designs shall conform to Standard Specifications for Highway Bridges, 16th Edition, 1996 plus '97 Interim Specifications as adopted by AASHTO.
Design notes as follows:
HS20-44 Live Load
Impact = 27%
Load Fraction as per AASHTO 3.23.4.
Total loss of prestress may be assumed to be 45 KSI
Superimposed dead load is 30 PSF for a future wearing surface. Superimposed dead load assumed to be equally distributed to the three beams in the section shown.
1/2" of top flange shall be deducted to account for traffic wear in allowable stress checks at service after losses have occurred, beam web reinforcement design, and flexural strength determination.
Tension in precompressed tensile zone at service after losses have occurred is limited to $6\sqrt{f'c}$

PRESTRESSED CONCRETE BEAMS: Prior to casting any prestressed members, calculations and shop drawings and complete details of the method, materials and equipment proposed for use in the prestressing operations shall be submitted a minimum of 21 days in advance of planned construction and shall bear the seal and signature of a professional engineer licensed in the state of Montana.

FINISHING CONCRETE: The bottoms of all beam stems and exterior face of exterior beams shall be given a rubbed finish, except a concrete gray epoxy mortar using AASHTO M235 Class II Epoxy Resin Adhesive may be used instead of the specified sand-cement mortar to reduce curing time. The epoxy mortar shall be rubbed with cement prior to hardening. The ends of the beams shall have all holes or acceptable rock pockets patched and strands cut off flush or burned back. Tops of beams shall be given a raked finish parallel to the roadway centerline as called for in Specification 552.13(C)(2) for bridge decks.

FABRICATION, TRANSPORTATION, AND INSTALLATION OF PRESTRESSED BEAMS: Beams shall be erected using galvanized steel shims where necessary. Galvanized steel shims shall be the same size as the elastomeric bearing pads and shall be placed between the beams and the pads such that no more than 1/8" vertical variation exists between adjacent beam flanges at the centerline of bearing prior to attaching weld ties and filling shear keys with non-shrink mortar.

PAINTING OF WELD TIE CONNECTIONS AND GUARD ANGLES: All weld ties not covered by 1 inch or more of concrete shall be painted with one primer coat and two field coats. The field coats shall be aluminum paint conforming to AASHTO M69, Type II. The guardangles may be painted in the same way in lieu of galvanizing.

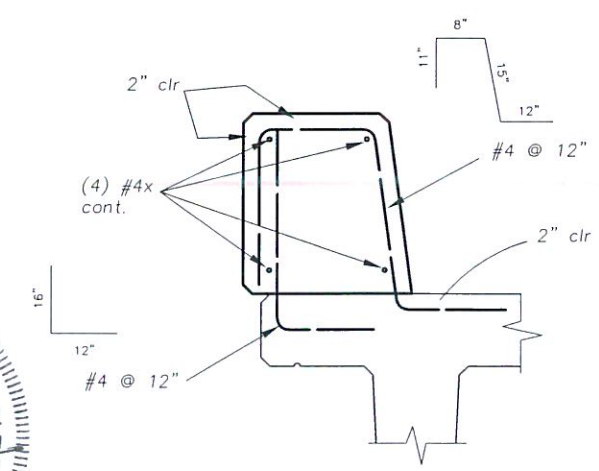

NOTE: Curb to be Plant Cast

TYPICAL CURB REINFORCING

Scale: 3/4" = 1'-0"

MONTANA
MICHAEL THOMAS JENSEN
13098PE
REGISTERED
PROFESSIONAL ENGINEER
12/31/99

BY	DATE	REVISION DESCRIPTION

DESIGN MTJ PROJ. NO. 4056
DRAWN MTJ DATE 12/99
CHECKED VA

DJ&A, P.C.
CONSULTING ENGINEERS & LAND SURVEYORS
3203 Russell Street, Missoula, Montana 59801-6591
Phone 406721-4320 Fax 406549-6371

DNRC
STILLWATER STATE FOREST
BRIDGE PROJECTS

FITZSIMMONS CREEK
SUPERSTRUCTURE PLAN AND DETAILS

SHEET 6 OF 7

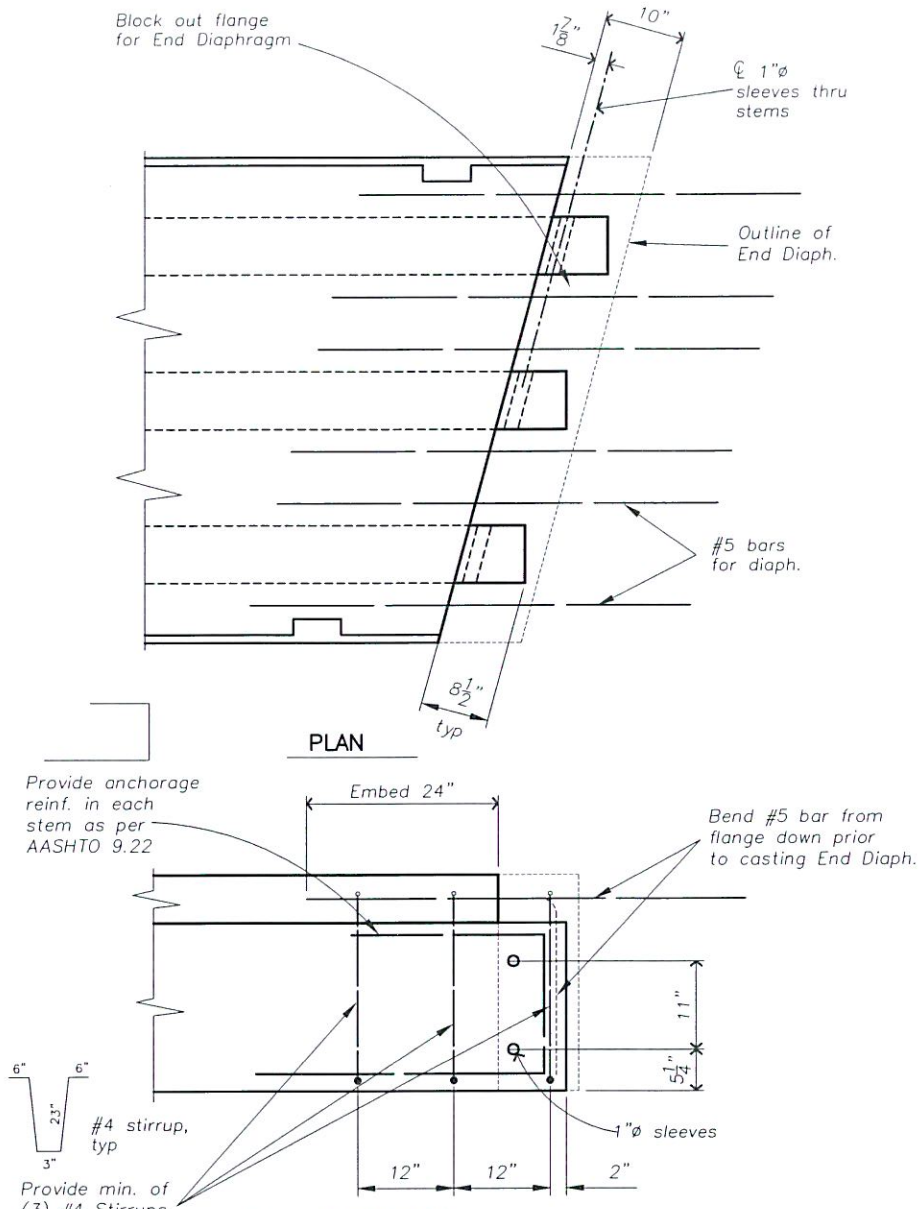

A/7 **DETAIL**
Scale: 1/2" = 1'-0"

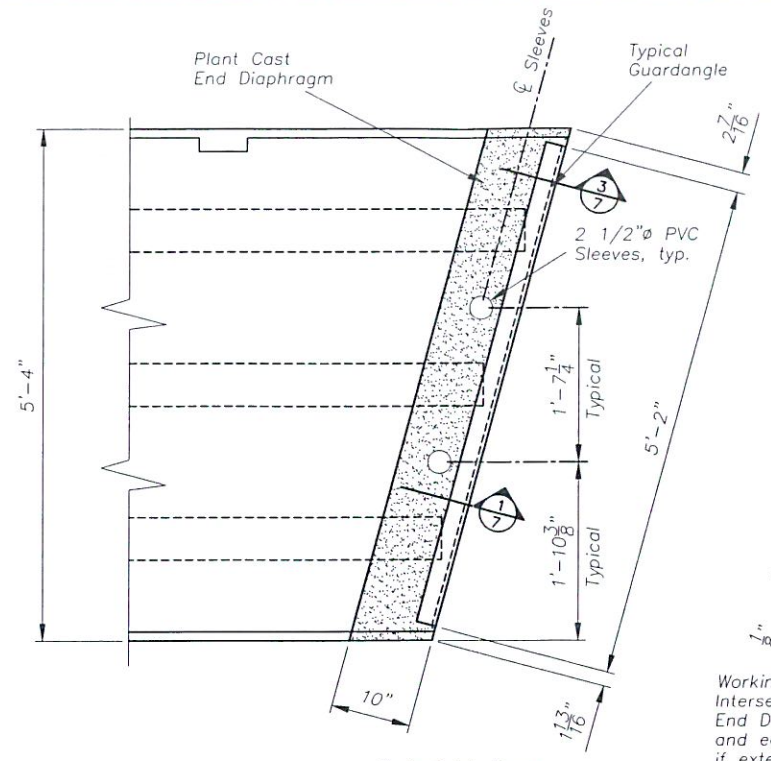

B/7 **DETAIL** Typical Int. Beam End Treatment
Scale: 1/2" = 1'-0"

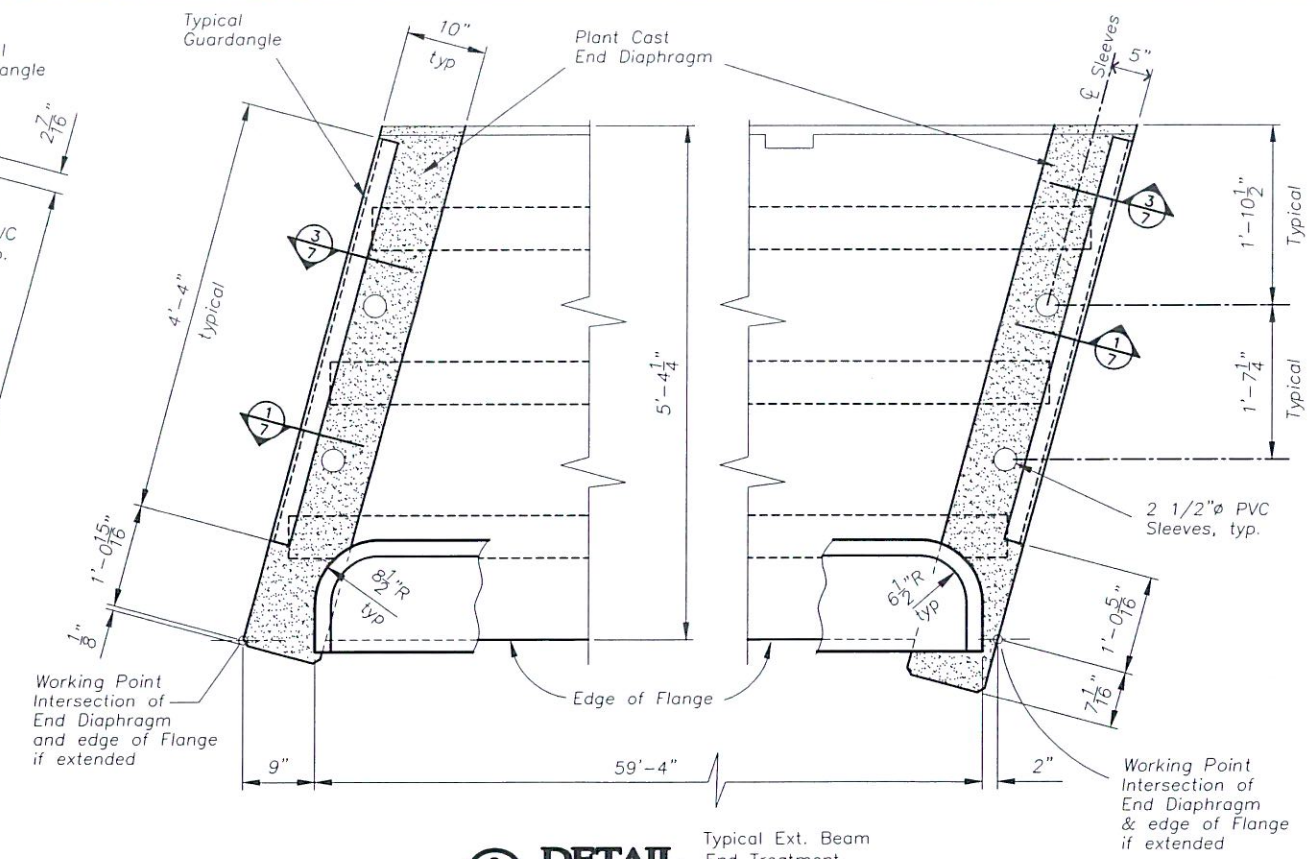

C/7 **DETAIL** Typical Ext. Beam End Treatment
Scale: 1/2" = 1'-0"

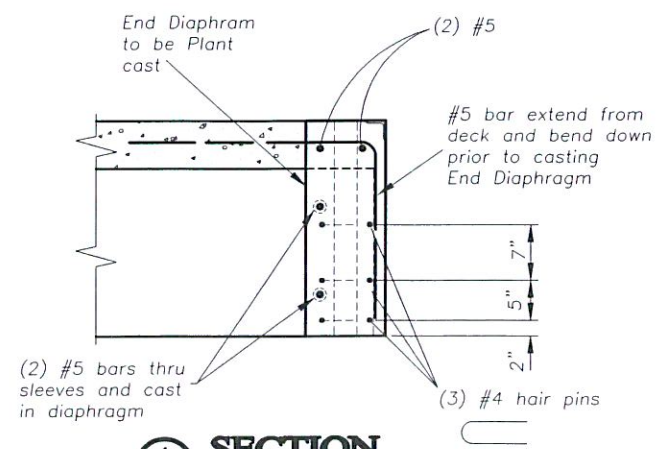

1/7 **SECTION**
Scale: 1/2" = 1'-0"

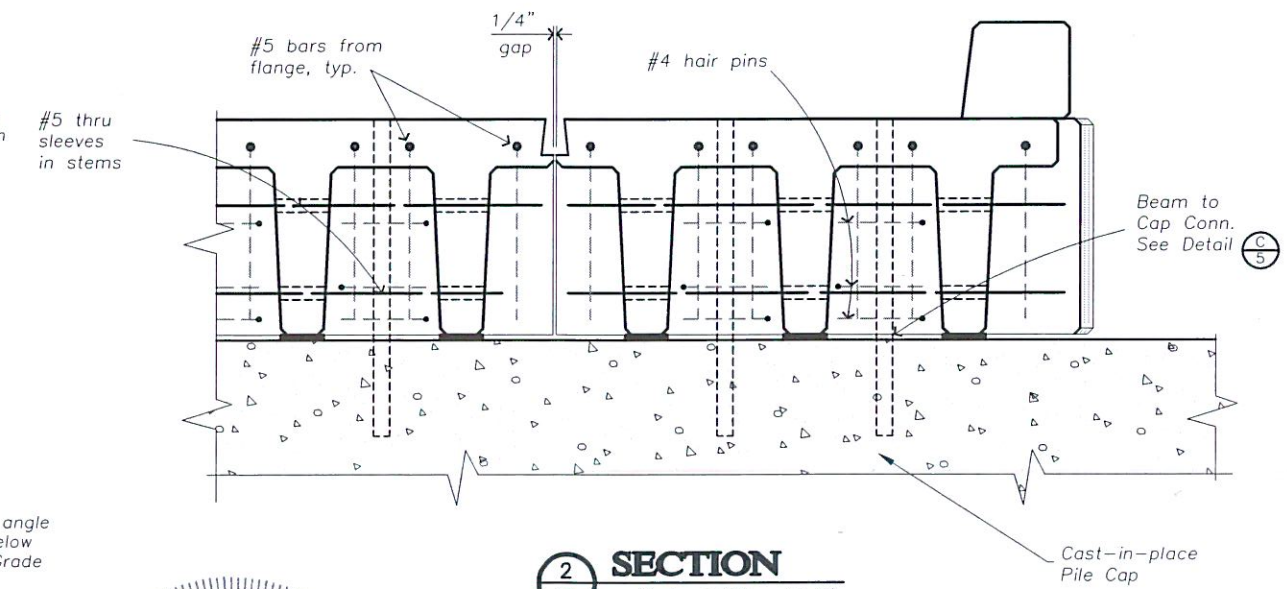

2/7 **SECTION**
Scale: 1/2" = 1'-0"

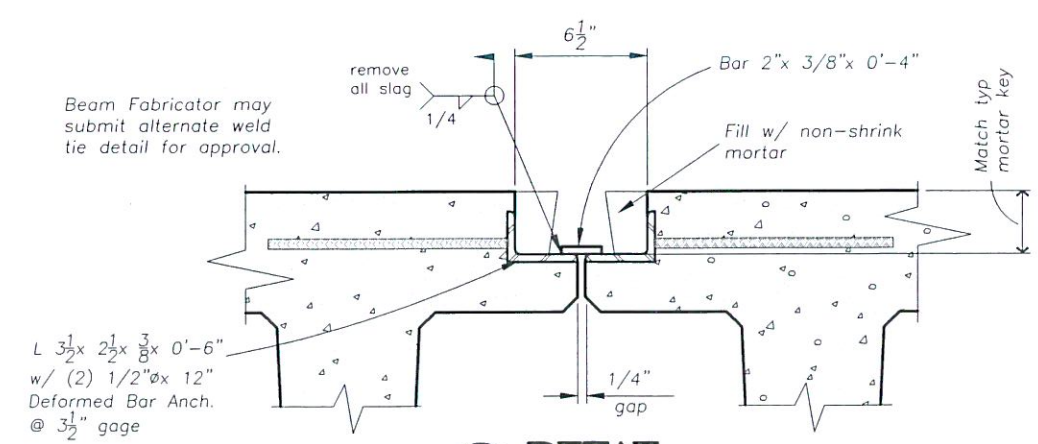

D/7 **DETAIL**
Not to Scale

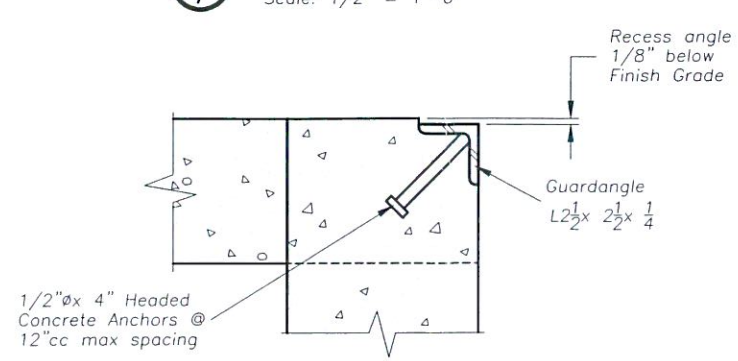

3/7 **SECTION**
Not to Scale

MONTANA
MICHAEL THOMAS JENSEN
13098PE
REGISTERED
PROFESSIONAL ENGINEER
12/31/99

BY	DATE	REVISION DESCRIPTION

DESIGN MTJ PROJ. NO. 4056
DRAWN MTJ DATE 12/99
CHECKED VA

DJ&A, P.C.
CONSULTING ENGINEERS & LAND SURVEYORS
3203 Russell Street, Missoula, Montana 59801-4591
Phone 406/721-4320 Fax 406/549-6371

DNRC
STILLWATER STATE FOREST
BRIDGE PROJECTS

FITZSIMMONS CREEK
SUPERSTRUCTURE DETAILS

SHEET 7 OF 7

0+52.51

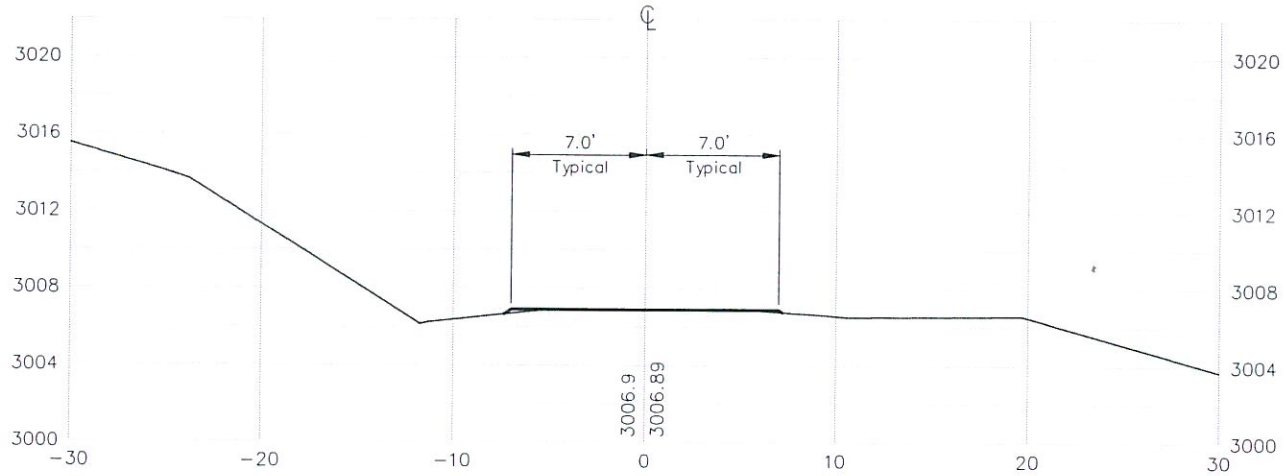

0+75

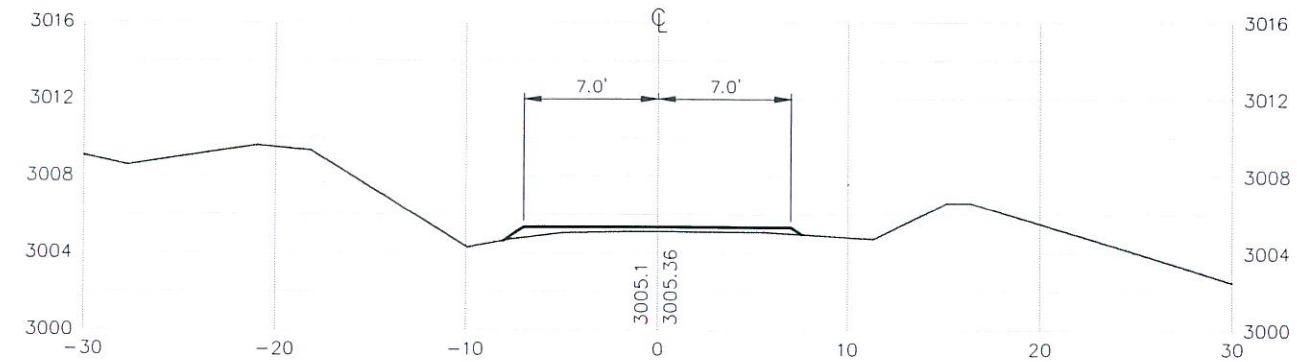

0+50

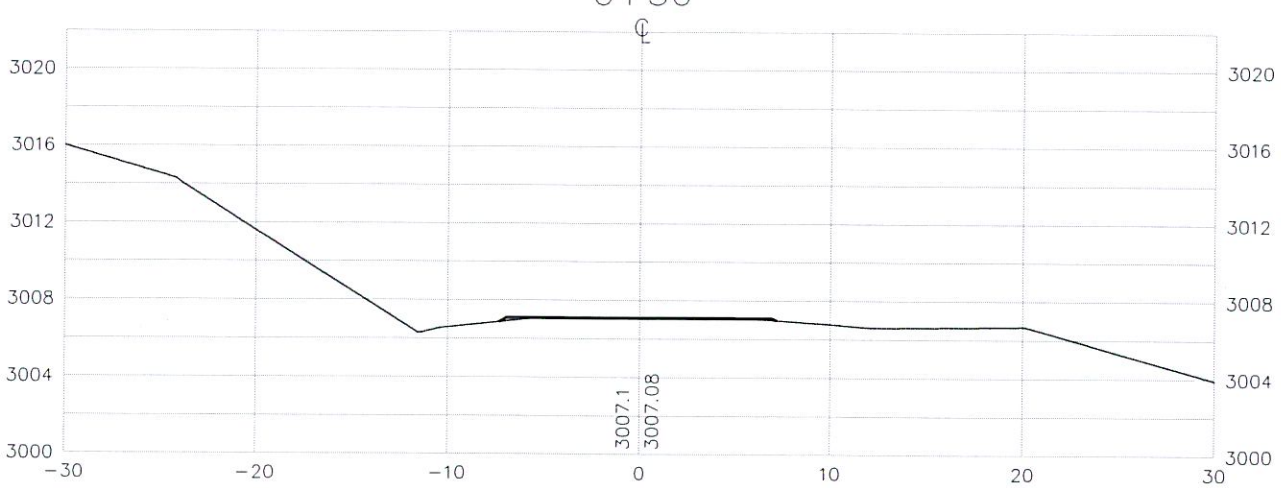

1+00

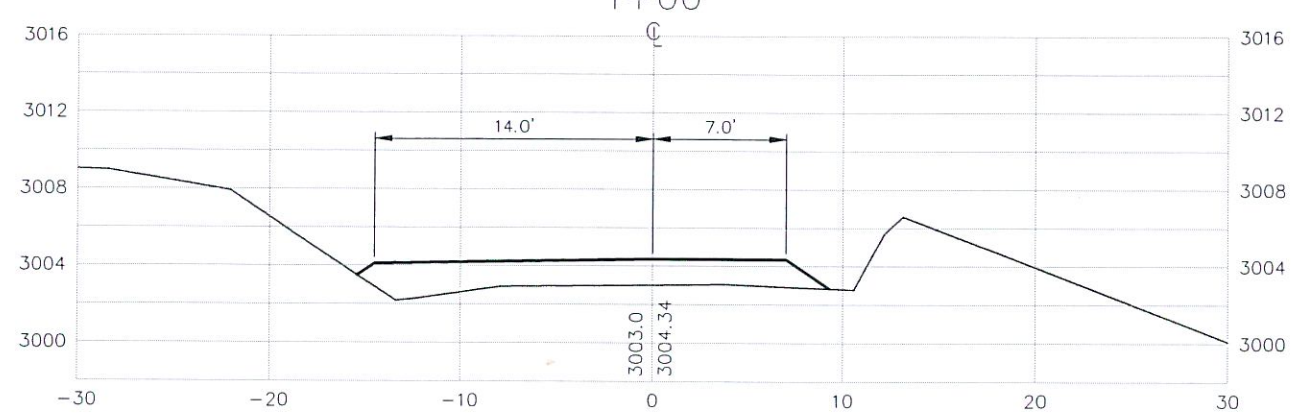

0+25

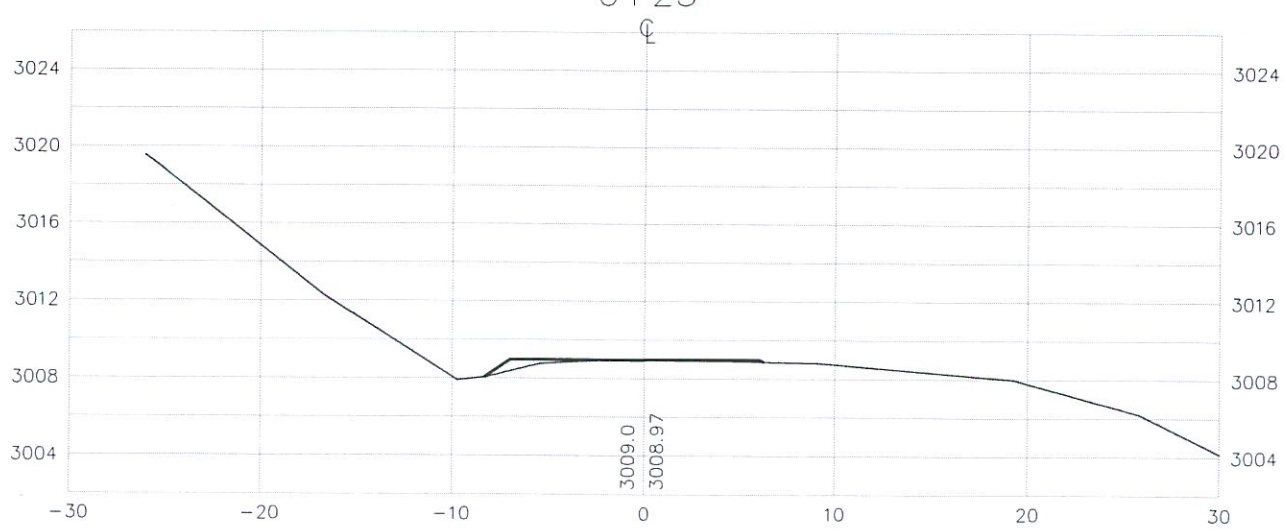

1+12

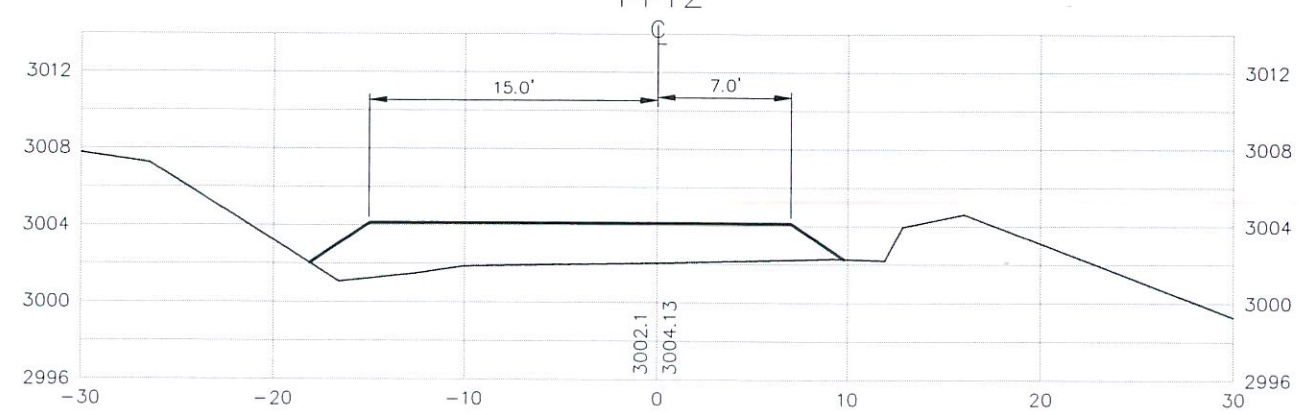

BY	DATE	REVISION DESCRIPTION

DESIGN MTJ PROJ. NO. 4056
DRAWN MTJ DATE
CHECKED

D&A, P.C.
CONSULTING ENGINEERS & LAND SURVEYORS
3203 Russell Street, Missoula, Montana 59801-6391
Phone 406/721-4325 Fax 406/549-6371

DNRC
STILLWATER STATE FOREST
BRIDGE PROJECTS

FITZSIMMONS CREEK
ROADWAY CROSS SECTIONS

SHEET 1 OF 4

1+50

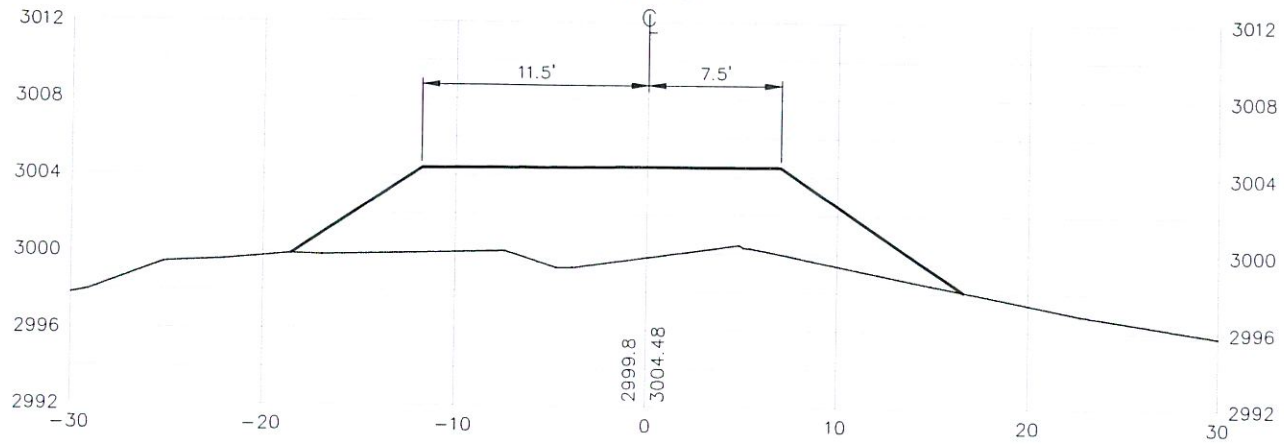

1+60.29

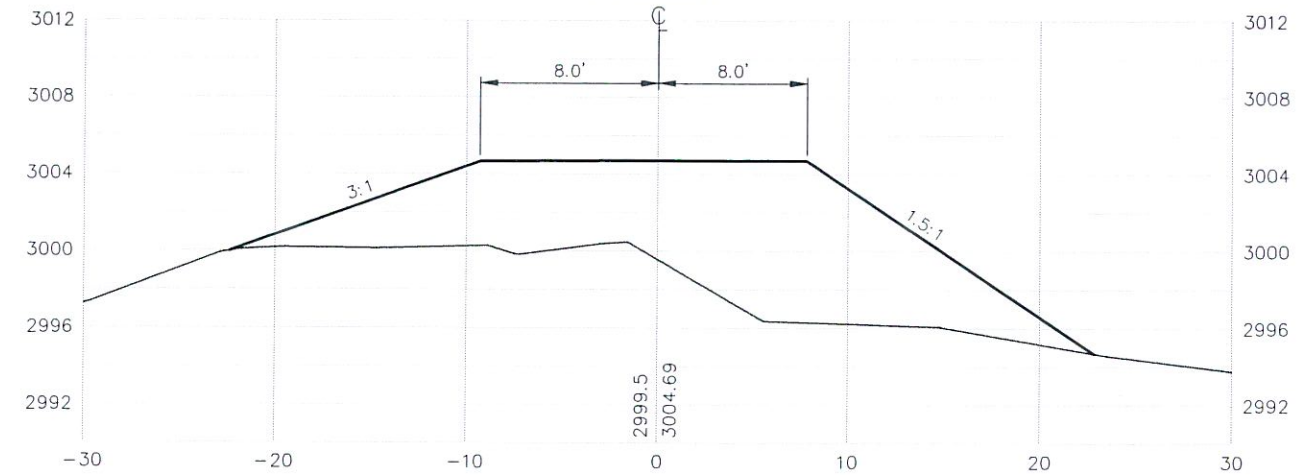

1+40

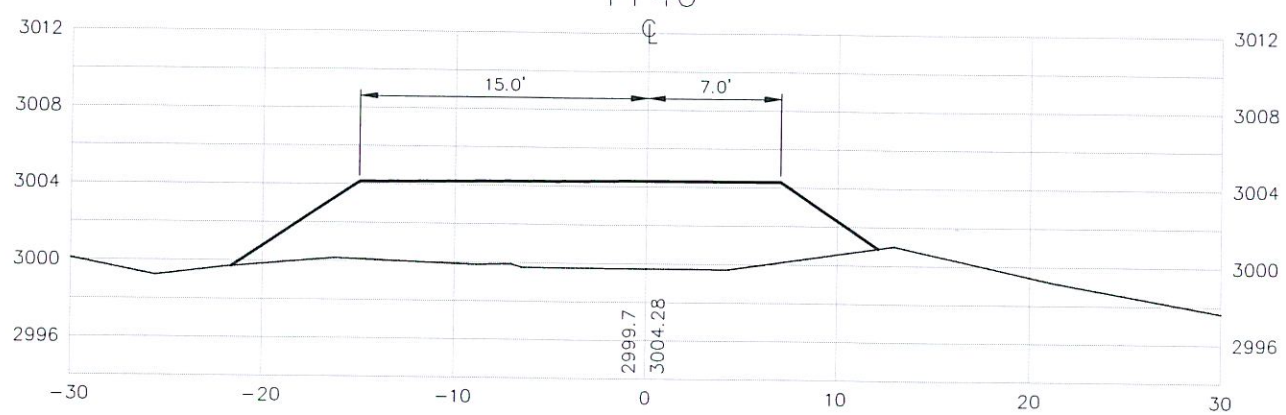

1+62.28

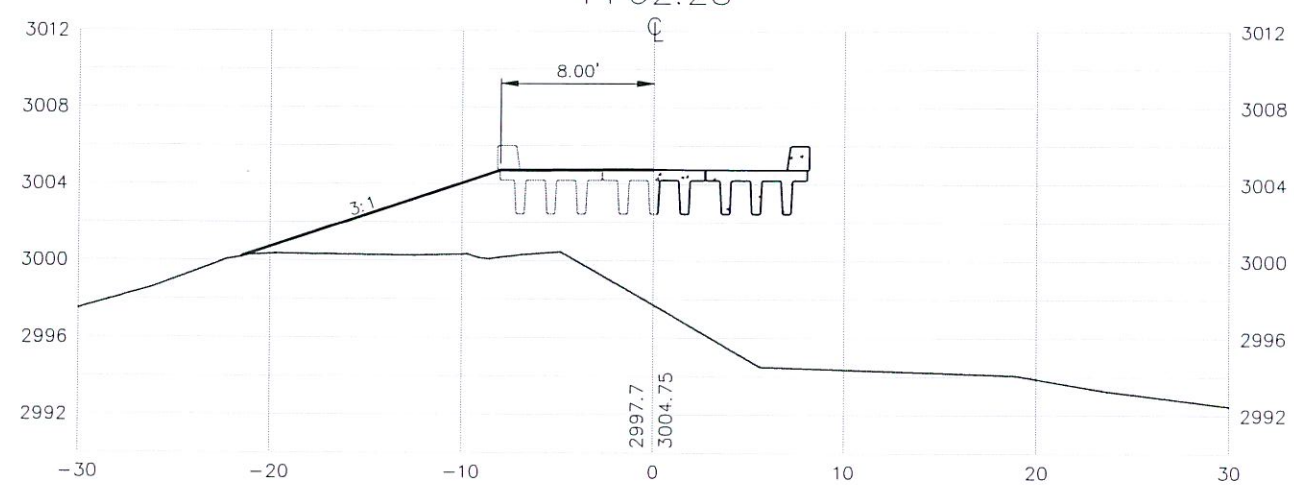

BRIDGE

1+25

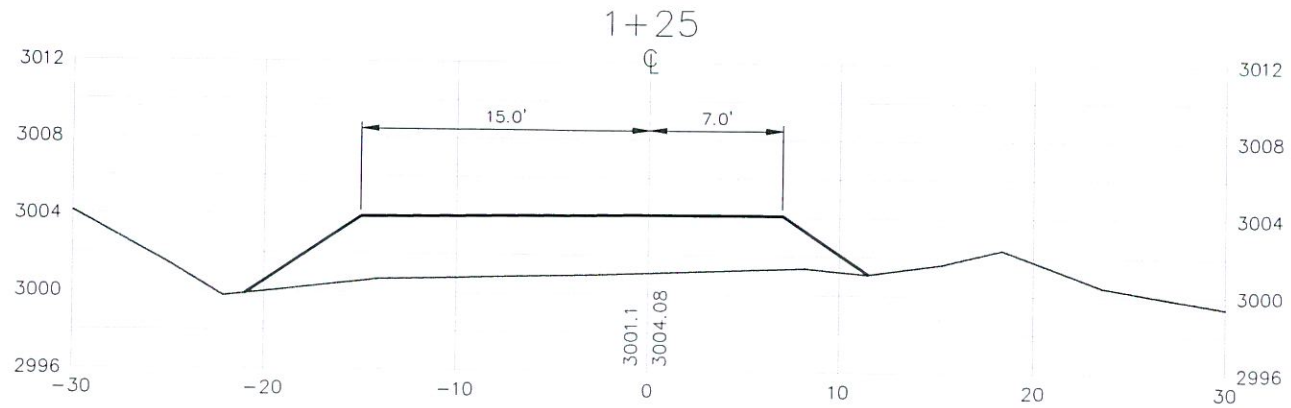

2+22.52

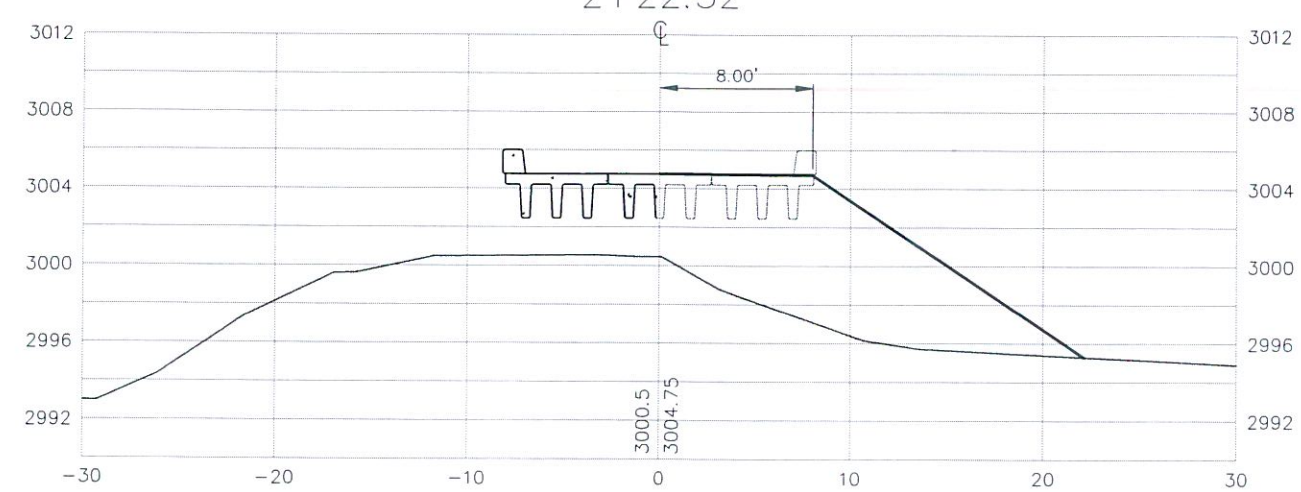

BY	DATE	REVISION DESCRIPTION

DESIGN MTJ PROJ. NO. 4056
DRAWN MTJ DATE
CHECKED

D&A, P.C.
CONSULTING ENGINEERS & LAND SURVEYORS
3203 Russell Street, Missoula, Montana 59801-6591
Phone 406/721-4320 Fax 406/549-6371

DNRC
STILLWATER STATE FOREST
BRIDGE PROJECTS

FITZSIMMONS CREEK
ROADWAY CROSS SECTIONS

SHEET 2 OF 4

2+75

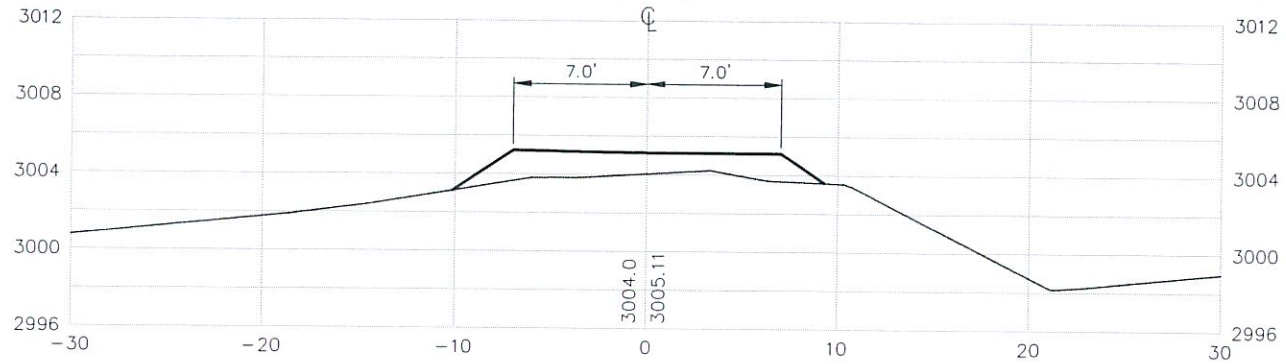

2+90

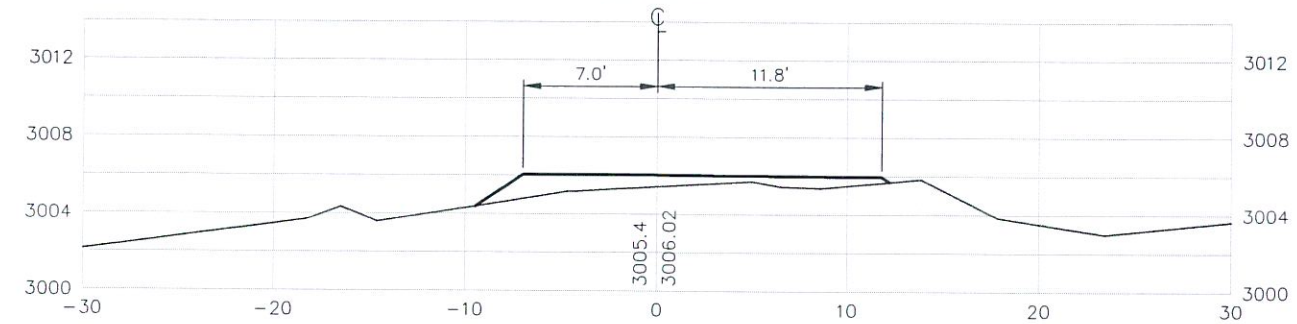

2+50

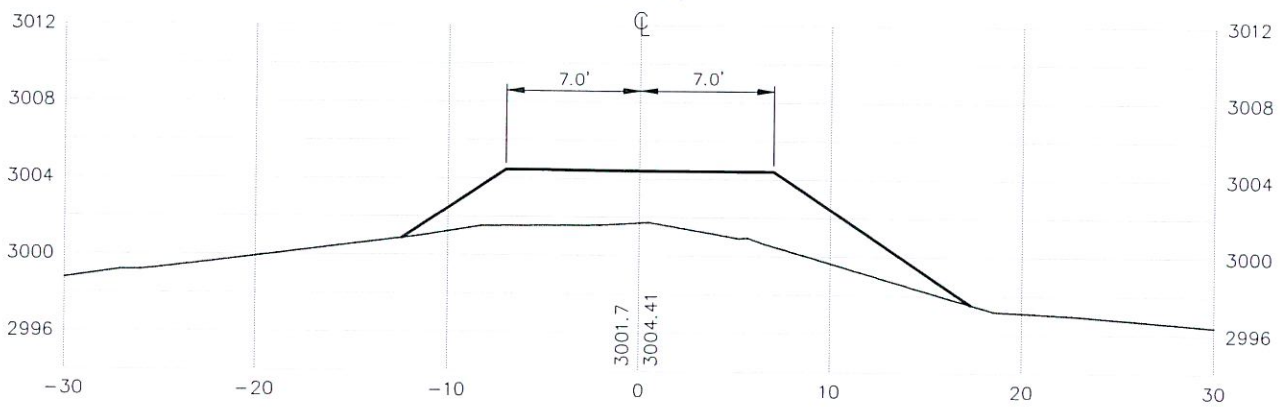

3+00

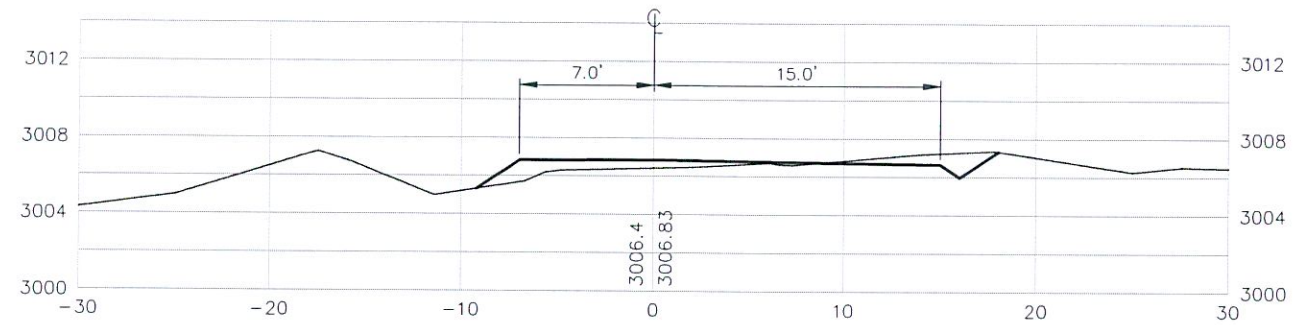

3+06.13

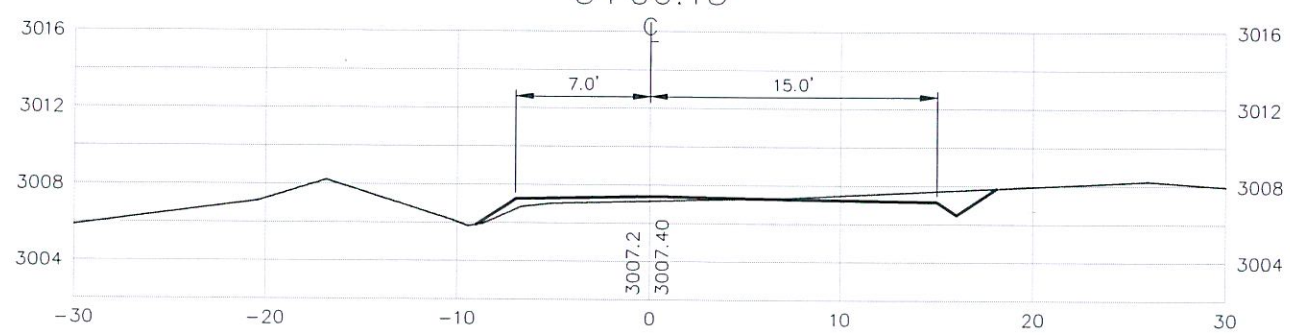

2+25

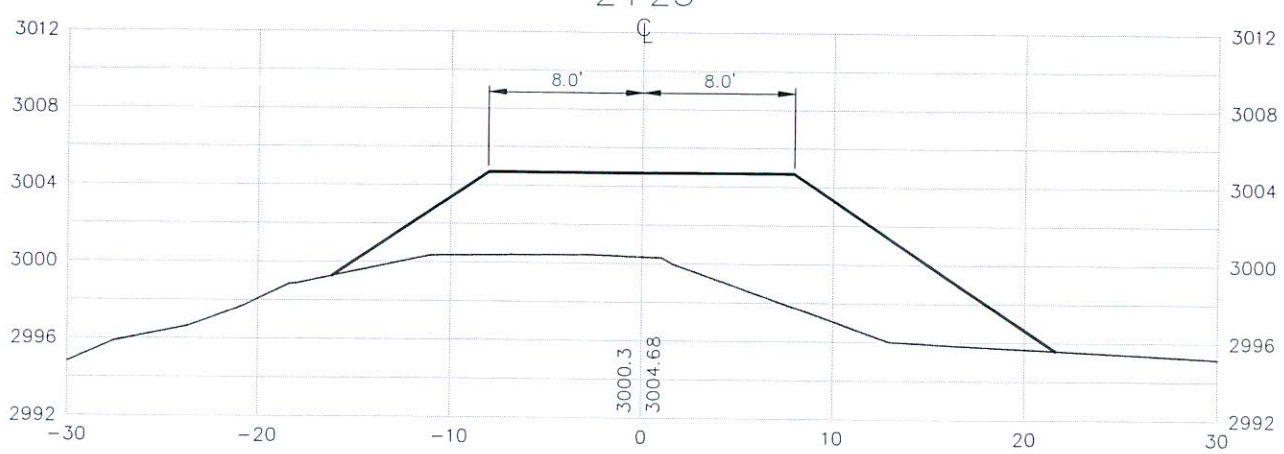

3+15

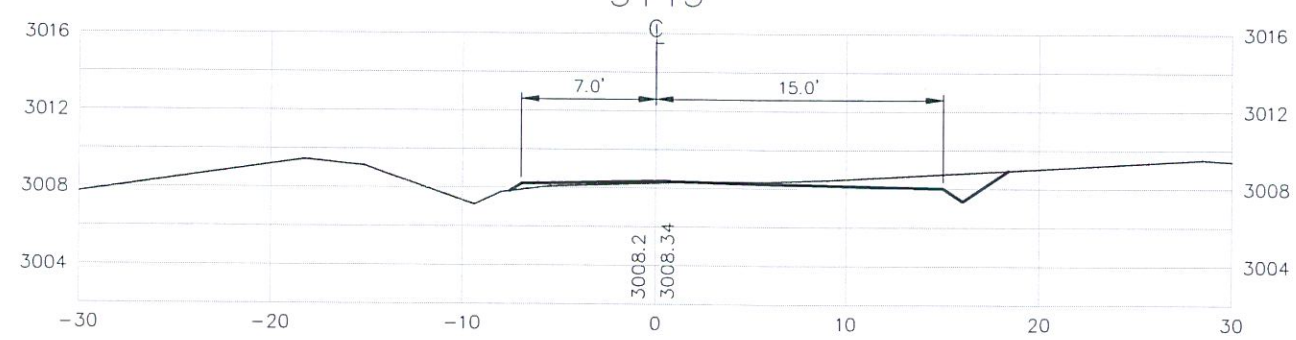

BY	DATE	REVISION DESCRIPTION

DESIGN MTJ PROJ. NO. 4056
DRAWN MTJ DATE
CHECKED

DJ&A, P.C.
CONSULTING ENGINEERS & LAND SURVEYORS
3203 Russell Street, Missoula, Montana 59801-6391
Phone 406/721-4320 Fax 406/549-6371

DNRC
STILLWATER STATE FOREST
BRIDGE PROJECTS

FITZSIMMONS CREEK
ROADWAY CROSS SECTIONS

SHEET 3 OF 4

3+50

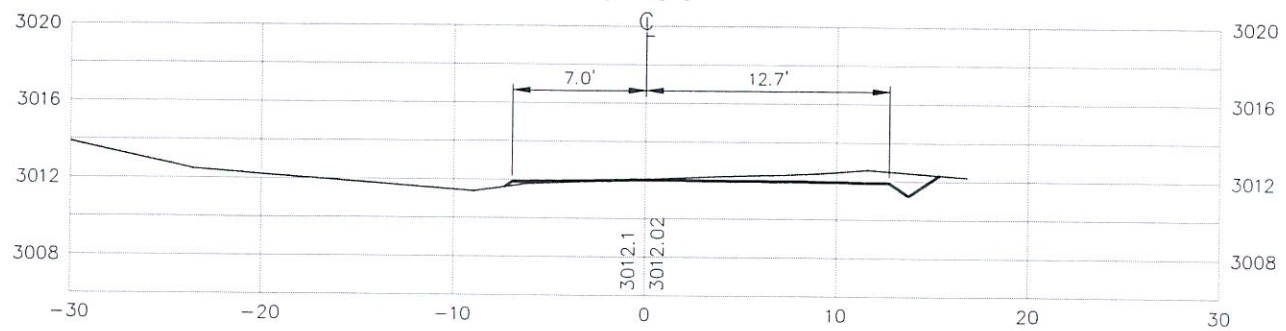

3+40

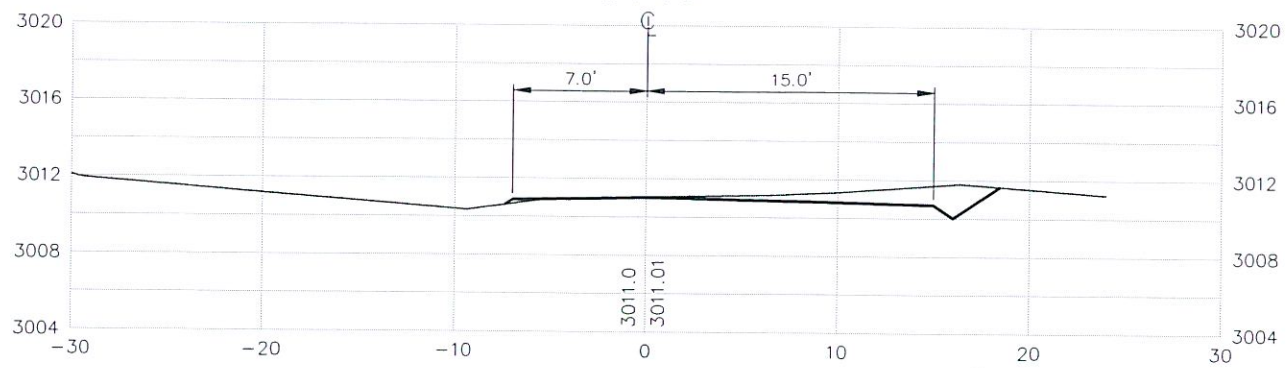

3+25

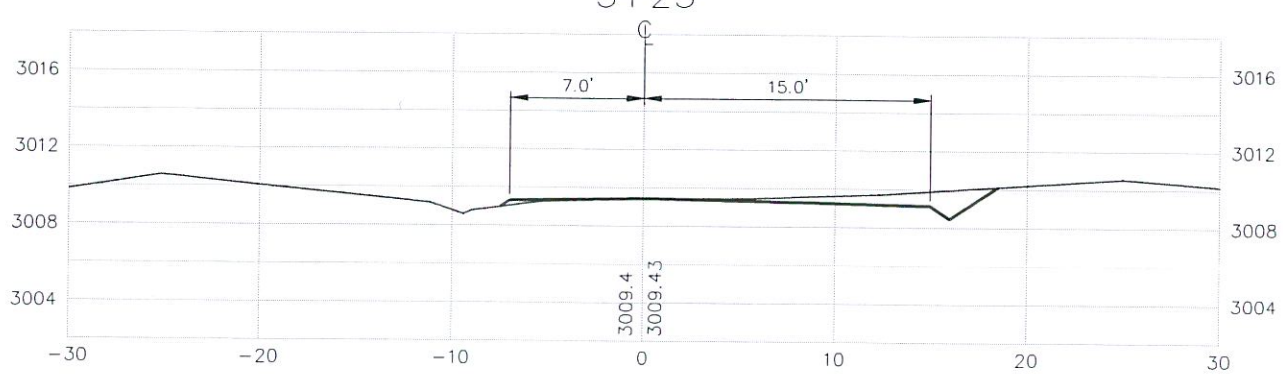

STATION	AREAS Square Feet		VOLUMES Cubic Yards		CUMULATIVE VOLUMES Cubic Yards	
	CUT	FILL	CUT	FILL	CUT	FILL
0+25	0.00	1.79				
			0.26	0.93	0.26	0.93
0+50	0.56	0.22				
			0.05	0.02	0.31	0.95
0+52.51	0.43	0.32				
			0.18	1.99	0.49	2.95
0+75	0.00	4.39				
			0.00	17.56	0.49	20.51
1+00	0.00	32.74				
			0.00	20.67	0.49	41.18
1+12	0.00	56.47				
			0.00	35.25	0.49	76.43
1+25	0.00	83.24				
			0.00	58.85	0.49	135.28
1+40	0.00	119.86				
			0.00	46.18	0.49	181.46
1+50	0.00	122.79				
			0.00	58.67	0.49	240.12
1+60.29	0.00	185.85				
			0.00	35.42	0.49	275.54
1+64.90	0.00	229.03				
			0.00	0.00	0.49	275.54

BRIDGE

STATION	AREAS Square Feet		VOLUMES Cubic Yards		CUMULATIVE VOLUMES Cubic Yards	
	CUT	FILL	CUT	FILL	CUT	FILL
2+19.90	0.00	156.13				
			0.00	20.51	0.00	20.51
2+23.50	0.00	151.47				
			0.00	8.32	0.00	28.82
2+25	0.00	147.90				
			0.00	100.98	0.00	129.80
2+50	0.00	70.22				
			0.00	42.27	0.00	172.07
2+75	0.00	21.08				
			0.00	9.49	0.00	181.57
2+90	0.00	13.09				
			0.80	3.72	0.80	185.29
3+00	4.30	6.99				
			1.02	1.17	1.82	186.45
3+06.13	4.72	3.31				
			2.03	0.73	3.85	187.19
3+15	6.83	1.23				
			2.82	0.32	6.66	187.51
3+25	7.45	0.53				
			5.22	0.21	11.88	187.71
3+40	10.26	0.23				
			3.15	0.12	15.03	187.83
3+50	5.91	0.41				
			2.20	0.41	17.24	188.24
3+65	1.74	1.09				
			0.00	0.00	17.24	188.24

BY	DATE	REVISION DESCRIPTION

DESIGN MTJ PROJ. NO. 4056
DRAWN MTJ DATE
CHECKED

D&A, P.C.
CONSULTING ENGINEERS & LAND SURVEYORS
3203 Russell Street, Missoula, Montana 59801-6581
Phone 406/721-4320 Fax 406/549-6371

DNRC
STILLWATER STATE FOREST
BRIDGE PROJECTS

FITZSIMMONS CREEK
ROADWAY CROSS SECTIONS