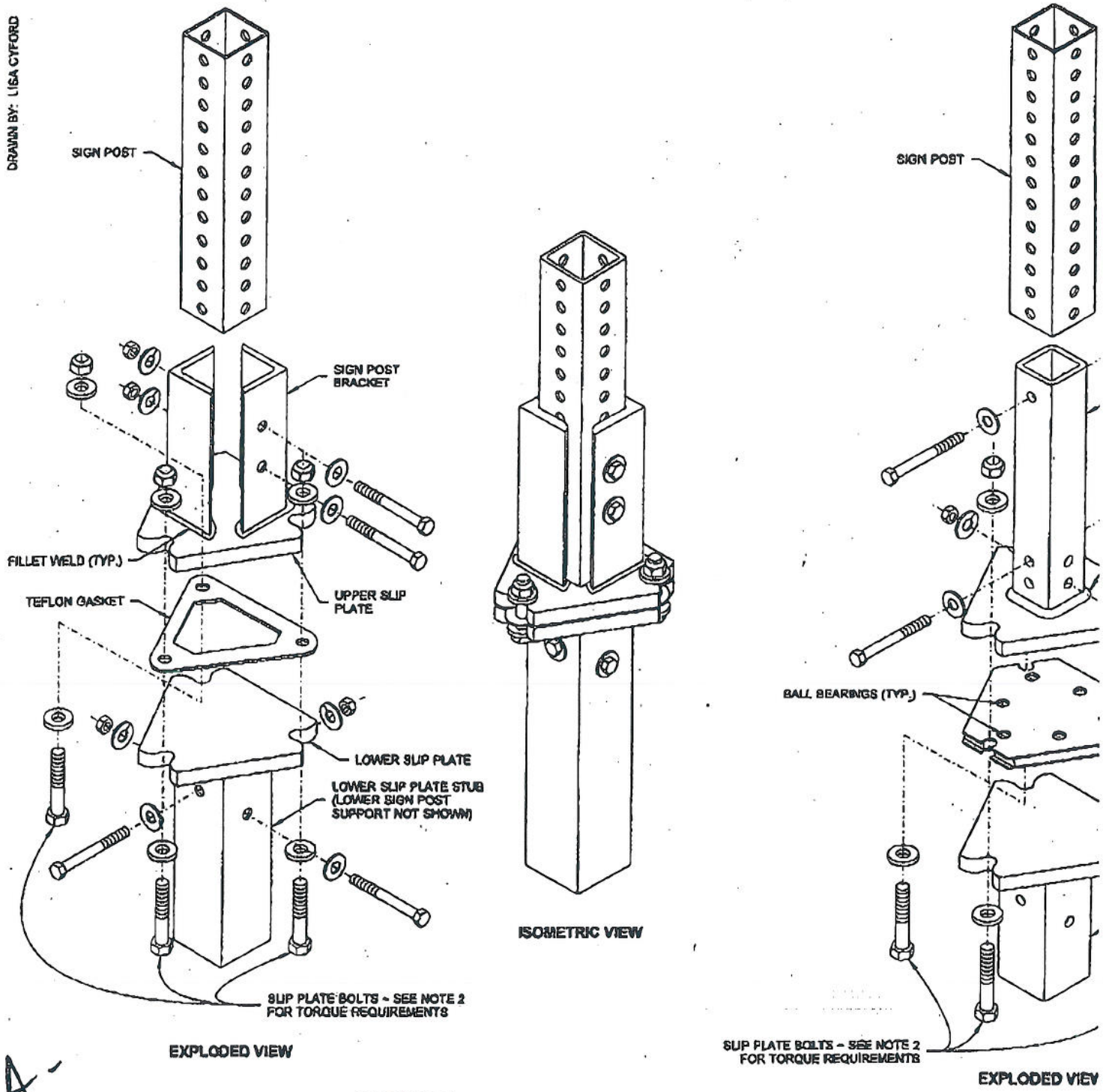

USA-

TYPE SB-1
SLIP BASE ASSEMBLY